KILLING, HELLE & JACKSON — Civil & Structural Engineers

WORLD TRADE CENTER | TITLE DRAWING BOOK 4 | DATE

REVISIONS

WTCI-17-LERA

4 - A1 -
Panel Schedules - Tower A

4 - B1 -
Panel Schedules - Tower B

4 - AB2 -
Panel Details Tower A & B
(See 4-AB2-1 for index)

4 - AB3 -
Schedules and Details
Floor 110 to 107
(See 4-[illegible] for index)

NOTE: See 4-ABO-0 for latest date for each page

LICENSED PROFESSIONAL ENGINEER — LESLIE E. ROBERTSON — No. 34360 — UNIVERSITY OF THE STATE OF NEW YORK

SKILLING, HELLE, CHRISTIANSEN, ROBERTSON — Structural & Civil Engineers

PROJECT: THE WORLD TRADE CENTER | TITLE: EXTERIOR WALL - PANEL SCHEDULES AND DETAILS | DATE: 10/ 6/72

REVISIONS

PRINTED 5/18/73

5/18/73
5/18/73

4-A80- 0		4-A1 -209	12/ 5/67	4-A1 -380	6/ 5/67	4-B1 - 30		4-B1 -209	5/14/69
4-A80- 0		4-A1 -210	6/ 5/67	4-A1 -381	12/ 5/67	INCL.	10/18/68	4-B1 -210	6/21/67
4-AB1- 1		4-A1 -211	6/ 5/67	4-A1 -382	6/ 5/67	4-B1 - 31		4-B1 -211	6/21/67
4-A1 - 2		4-A1 -212	12/ 5/67	4-A1 -383	12/ 5/67	THRU		4-B1 -212	5/14/69
THRU		4-A1 -213	6/ 5/67	4-A1 -384	6/ 5/67	4-B1 -164		4-B1 -213	6/21/67
4-A1 -165		4-A1 -214	12/ 5/67	4-A1 -385	6/ 5/67	INCL.	6/21/67	4-B1 -214	5/14/69
INCL.	6/ 5/67	4-A1 -215		4-A1 -386	12/ 5/67	4-B1 -165	5/14/69	4-B1 -215	
4-A1 -166	12/ 5/67	THRU		4-A1 -387	6/ 5/67	4-B1 -166	12/ 5/67	THRU	
4-A1 -167	12/ 5/67	4-A1 -339		4-A1 -388	12/ 5/67	4-B1 -167	12/ 5/67	4-B1 -320	
4-A1 -168	12/ 5/67	INCL	6/ 5/67	4-A1 -389		4-B1 -168	12/ 5/67	INCL	6/21/67
4-A1 -169	12/ 5/67	4-A1 -340	12/ 5/67	THRU		4-B1 -169	12/ 5/67	4-B1 -321	5/14/69
4-A1 -170	12/ 5/67	4-A1 -341	12/ 5/67	4-A1 -484		4-B1 -170	12/ 5/67	4-B1 -322	5/14/69
4-A1 -171	12/ 5/67	4-A1 -342	12/ 5/67	INCL	6/ 5/67	4-B1 -171	12/ 5/67	4-B1 -323	5/14/69
4-A1 -172	12/ 5/67	4-A1 -343	12/ 5/67	4-A1 -485	7/18/69	4-B1 -172	12/ 5/67	4-B1 -324	5/14/69
4-A1 -173	12/ 5/67	4-A1 -344	12/ 5/67	4-A1 -486	7/18/69	4-B1 -173	12/ 5/67	4-B1 -325	6/21/67
4-A1 -174	6/ 5/67	4-A1 -345	12/ 5/67	4-A1 -487	7/18/69	4-B1 -174	6/21/67	4-B1 -326	5/14/69
4-A1 -175	6/ 5/67	4-A1 -346	12/ 5/67	4-A1 -488	7/18/69	4-B1 -175	6/21/67	4-B1 -327	5/14/69
4-A1 -176	12/ 5/67	4-A1 -347	12/ 5/67	4-A1 -489	6/ 5/67	4-B1 -176	5/14/69	4-B1 -328	5/14/69
4-A1 -177	12/ 5/67	4-A1 -348	6/ 5/67	4-A1 -490	7/18/69	4-B1 -177	12/ 5/67	4-B1 -329	5/14/69
4-A1 -178	6/ 5/67	4-A1 -349	6/ 5/67	4-A1 -491	7/18/69	4-B1 -178	6/21/67	4-B1 -330	6/21/67
4-A1 -179	12/ 5/67	4-A1 -350	6/ 5/67	4-A1 -492	7/18/69	4-B1 -179	12/ 5/67	4-B1 -331	5/14/69
4-A1 -180	6/ 5/67	4-A1 -351	12/ 5/67	4-A1 -493	7/18/69	4-B1 -180	6/21/67	4-B1 -332	5/14/69
4-A1 -181	12/ 5/67	4-A1 -352	6/ 5/67	4-A1 -494	6/ 5/67	4-B1 -181	5/14/69	4-B1 -333	5/14/69
4-A1 -182	12/ 5/67	4-A1 -353	12/ 5/67	4-A1 -495		4-B1 -182	12/ 5/67	4-B1 -334	5/14/69
4-A1 -183	6/ 5/67	4-A1 -354	6/ 5/67	THRU		4-B1 -183	6/21/67	4-B1 -335	6/21/67
4-A1 -184	12/ 5/67	4-A1 -355	6/ 5/67	4-A1 -502		4-B1 -184	12/ 5/67	4-B1 -336	6/21/67
4-A1 -185	6/ 5/67	4-A1 -356	12/ 5/67	INCL.	11/10/69	4-B1 -185	6/21/67	4-B1 -337	6/21/67
4-A1 -186	12/ 5/67	4-A1 -357	6/ 5/67	4-A1 -503	11/10/69	4-B1 -186	5/14/69	4-B1 -338	6/21/67
4-A1 -187	12/ 5/67	4-A1 -358	12/ 5/67	4-A1 -504	11/10/69	4-B1 -187	12/ 5/67	4-B1 -339	6/21/67
4-A1 -188	6/ 5/67	4-A1 -359	6/ 5/67	4-A1 -505	11/10/69	4-B1 -188	6/21/67	4-B1 -340	12/ 5/67
4-A1 -189	12/ 5/67	4-A1 -360	6/ 5/67	4-A1 -506	11/10/69	4-B1 -189	12/ 5/67	4-B1 -341	12/ 5/67
4-A1 -190	6/ 5/67	4-A1 -361	12/ 5/67	4-A1 -507	11/10/69	4-B1 190	6/21/67	4-B1 -342	12/ 5/67
4-A1 -191	6/ 5/67	4-A1 -362	6/ 5/67	4-A1 -508	11/10/69	4-B1 191	6/21/67	4-B1 343	12/ 5/67
4-A1 -192	12/ 5/67	4-A1 -363	12/ 5/67			4-B1 192	12/ 5/67	4-B1 344	12/ 5/67
4-A1 -193	6/ 5/67	4-A1 -364	6/ 5/67	4-B1 - 2		4-B1 193	6/21/67	4-B1 -345	12/ 5/67
4-A1 -194	12/ 5/67	4-A1 -365	6/ 5/67	THRU		4-B1 194	12/ 5/67	4-B1 -346	12/ 5/67
4-A1 -195	6/ 5/67	4-A1 -366	12/ 5/67	4-B1 - 7		4-B1 195	6/21/67	4-B1 -347	12/ 5/67
4-A1 -196	6/ 5/67	4-A1 -367	6/ 5/67	INCL.	10/18/68	4-B1 196	6/21/67	4-B1 -348	6/21/67
4-A1 -197	12/ 5/67	4-A1 -368	12/ 5/67	4-B1 - 8	3/12/69	4-B1 197	12/ 5/67	4-B1 -349	6/21/67
4-A1 -198	6/ 5/67	4-A1 -369	6/ 5/67	4-B1 - 9	10/18/68	4-B1 198	6/21/67	4-B1 -350	6/21/67
4-A1 -199	12/ 5/67	4-A1 -370	6/ 5/67	4-B1 - 10	3/12/69	4-B1 199	12/ 5/67	4-B1 -351	12/ 5/67
4-A1 -200	6/ 5/67	4-A1 -371	12/ 5/67	4-B1 - 11		4-B1 200	6/21/67	4-B1 -352	6/21/67
4-A1 -201	6/ 5/67	4-A1 -372	6/ 5/67	THRU		4-B1 201	6/21/67	4-B1 -353	12/ 5/67
4-A1 -202	12/ 5/67	4-A1 -373	12/ 5/67	4-B1 - 22		4-B1 202	5/14/69	4-B1 -354	6/21/67
4-A1 -203	6/ 5/67	4-A1 -374	6/ 5/67	INCL.	10/18/68	4-B1 203	6/21/67	4-B1 -355	6/21/67
4-A1 -204	12/ 5/67	4-A1 -375	6/ 5/67	4-B1 - 23	3/12/69	4-B1 204	5/14/69	4-B1 -356	12/ 5/67
4-A1 -205	6/ 5/67	4-A1 -376	12/ 5/67	4-B1 - 24	10/18/68	4-B1 -205	6/21/67	4-B1 -357	6/21/67
4-A1 -206	6/ 5/67	4-A1 -377	6/ 5/67	4-B1 - 25	3/12/69	4-B1 -206	6/21/67	4-B1 -358	12/ 5/67
4-A1 -207	12/ 5/67	4-A1 -378	12/ 5/67	4-B1 - 26		4-B1 -207	5/14/69	4-B1 -359	6/21/67
4-A1 -208	6/ 5/67	4-A1 -379	6/ 5/67	THRU		4-B1 -208	6/21/67	4-B1 -340	5/14/69

LICENSED PROFESSIONAL ENGINEER * LESLIE E ROBERTSON * No. 34960 IN THE STATE OF NEW YORK

SKILLING, HELLE, CHRISTIANSEN, ROBERTSON — Structural & Civil Engineers

PROJECT: THE WORLD TRADE CENTER

TITLE: EXTERIOR WALL - PANEL SCHEDULES AND DETAILS

DATE: 10/ 6/72

REVISIONS

PRINTED 5/18/73

4-B1 -361	12/ 5/67	INCL	11/10/69	4-B3 - 2.3	8/ 3/70
4-B1 -362	5/14/69	4-B1 -508	11/10/69	4-B3 - 2.4	8/ 3/70
4-B1 -363	12/ 5/67	4-AB2- 1	3/16/70	4-AB3- 3	3/16/70
4-B1 -364	6/21/67	4-AB2- 2	7/18/69	4-AB3- 4	3/16/70
4-B1 -365	5/14/69	4-AB2- 3	5/11/67	4-AB3- 5.1	8/ 3/70
4-B1 -366	12/ 5/67	4-AB2- 4	7/18/69	4-AB3- 5.2	8/ 3/70
4-B1 -367	5/14/69	4-AB2- 5	7/18/69	4-AB3- 6	8/ 3/70
4-B1 -368	12/ 5/67	4-AB2- 6	5/11/67	4-AB3- 7.1	8/ 3/70
4-B1 -369	6/21/67	4-AB2- 7	11/ 7/67	4-AB3- 7.2	4/27/70
4-B1 -370	5/14/69	4-AB2- 8	3/16/70	4-AB3- 7.3	8/ 3/70
4-B1 -371	12/ 5/67	4-AB2- 9	6/ 5/67	4-AB3- 8.1	8/ 3/70
4-B1 -372	5/14/69	4-AB2- 10	7/28/67	4-AB3- 8.2	8/ 3/70
4-B1 -373	12/ 5/67	4-AB2- 11	3/16/70	4-AB3- 9	4/10/70
4-B1 -374	6/21/67	4-AB2- 12	3/11/68	4-AB3- 10	4/27/70
4-B1 -375	6/21/67	4-AB2- 13	3/11/68	4-AB3- 11	8/ 3/70
4-B1 -376	5/14/69	4-AB2- 14	3/11/68		
4-B1 -377	6/21/67	4-AB2- 15	5/14/69		
4-B1 -378	5/14/69	4-AB2- 16	6/ 5/67		
4-B1 -379	6/21/67	4-AB2- 17	6/ 5/67		
4-B1 -380	6/21/67	4-AB2- 18	11/ 7/67		
4-B1 -381	5/14/69	4-AB2- 19	3/16/70		
4-B1 -382	6/21/67	4-AB2- 19.1	3/16/70		
4-B1 -383	5/14/69	4-AB2- 20	VOID.		
4-B1 384	6/21/67	4-AB2- 21	7/28/67		
4-B1 385	6/21/67	4-AB2- 22	6/ 5/67		
4-B1 386	5/14/69	4-AB2- 23	11/ 7/67		
4-B1 387	6/21/67	4-AB2- 24	7/28/67		
4-B1 388	5/14/69	4-AB2- 25	6/ 5/67		
4-B1 -389		4-AB2- 26	6/ 5/67		
THRU		4-AB2- 27	7/18/69		
4-B1 -484		4-AB2- 28	6/ 5/67		
INCL	6/21/67	4-AB2- 29	3/11/68		
4-B1 -485		4-AB2- 30	7/18/69		
THRU		4-AB2- 31	11/ 7/67		
4-B1 -488		4-AB2- 32	3/16/70		
INCL	9/ 2/69	4-AB2- 33	3/16/70		
4-B1 -489	6/21/67	4-AB2- 33.1	10/18/68		
4-B1 -490		4-AB2- 34	3/16/70		
THRU		4-AB2- 35	10/18/68		
4-B1 -493		4-AB2- 36	3/12/69		
INCL	9/ 2/69	4-AB2- 37	11/10/69		
4-B1 -494	6/21/67				
4-B1 -495					
THRU		4-AB3- 1	8/ 3/70		
4-B1 -502		4-A3 - 2.1	8/ 3/70		
INCL	11/10/69	4-A3 - 2.2	8/ 3/70		
4-B1 -503	11/10/69	4-A3 - 2.3	8/ 3/70		
4-B1 -504		4-A3 - 2.4	8/ 3/70		
THRU		4-B3 - 2.1	8/ 3/70		
4-B1 -507		4-B3 - 2.2	8/ 3/70		

LICENSED PROFESSIONAL ENGINEER — LESLIE E. ROBERTSON — No. 24360 — OF THE STATE OF NEW YORK

WORTHINGTON, SKILLING, HELLE & JACKSON Civil & Structural Engineers

PROJECT: THE WORLD TRADE CENTER | TITLE: DRAWING BOOK 4 GENERAL NOTES | DATE: 6- 5-67

( ) REVISIONS

12-5-67
6-3-68
1-3-69
2-3-69
3-3-69
4-1-69
Printed 5-1-69

PANEL NUMBER (1) (2) (3)	PANEL TYPE (4)	COLUMN 1 TYPE (5)	FY1 (6)	FY2 (7)	CSU (8)	CSL (9)	COLUMN 2 TYPE (5)	FY1 (6)	FY2 (7)	CSU (8)	CSL (9)	COLUMN 3 TYPE (5)	FY1 (6)	FY2 (7)	CSU (8)	CSL (9)

PANEL NUMBER (1) (2) (3)	FLOOR (10)	SPANDREL PLATE T4 (11)	FY4 (12)	SCL (13)	SCR (14)	WELDMENTS NO 5 (15) (16)	NO 6 (17)	NO 7 (18)	SEAT DETAIL COL 1 (19)	COL 2 (19)	COL 3 (19)

NOTES — REF DWGS 4-AB2-

(1)	COLUMN NUMBER FOR CENTER COLUMN OF PANEL	
(2)	NUMBER OF STORY CONTAINING UPPER SPLICE	
(3)	NUMBER OF STORY CONTAINING LOWER SPLICE	
(4)	PANEL TYPE	2 TO 7
(5)	COLUMN TYPE	8 TO 10
(6)	REQUIRED YIELD STRENGTH FOR PLATE NO.1(KSI)	
(7)	REQUIRED YIELD STRENGTH FOR PLATES NO.2 AND NO.3 (KSI)	
(8)	COLUMN SPLICE UPPER (DETAIL NUMBER)	12 TO 16
(9)	COLUMN SPLICE LOWER (DETAIL NUMBER)	12 TO 16
(10)	FLOOR LEVEL OF SPANDREL	
(11)	THICKNESS OF SPANDREL PLATE NO.4 (INCHES)	
(12)	REQUIRED YIELD STRENGTH FOR PLATE NO.4(KSI)	
(13)	SPANDREL CONNECTION LEFT (DETAIL NUMBER)	26 TO 30
(14)	SPANDREL CONNECTION RIGHT (DETAIL NUMBER)	26 TO 30
(15)	SIZE OF WELD NO. 5	11,18 TO 24
(16)	LENGTH OF WELD NO. 5	11,18 TO 24
(17)	SIZE OF WELD NO. 6	11,18 TO 24
(18)	SIZE OF WELD NO. 7	11,18 TO 24
(19)	SEAT DETAIL NUMBER	31 TO 36
(20)	PANELS ARE VIEWED FROM INSIDE OF BUILDING LOOKING OUT	

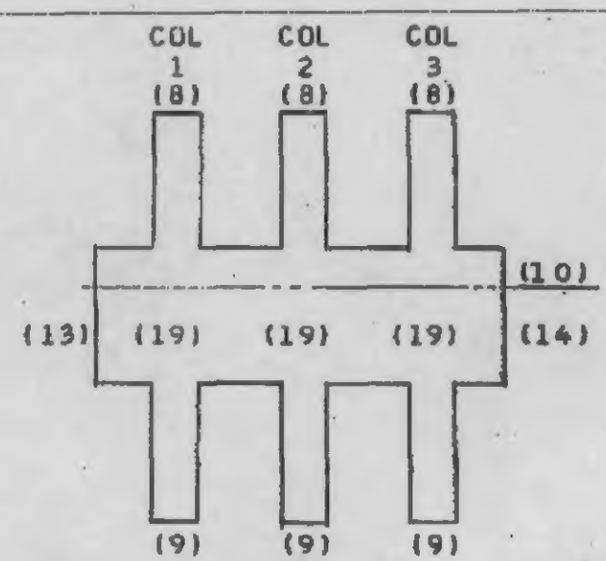

LICENSED PROFESSIONAL ENGINEER LESLIE E. ROBERTSON No. 34360 UNIVERSITY OF THE STATE OF NEW YORK

Rev. No 1. 7-10-67
No 2. 12-5-67

WORTHINGTON, SKILLING, HELLE & JACKSON — Civil & Structural Engineers

PROJECT THE WORLD TRADE CENTER | TITLE EXTERIOR WALL - DETAILS - INDEX | DATE 6-5-67

REVISIONS

7-10-67
6-3-68
1-3-69
2-3-69
3-3-69
4-1-69
Printed 5-1-69
11-10-69
3-16-70

4-AB2-1 Index
4-AB2-2 Panel types 100-150
4-AB2-3 Panel types 200-216
4-AB2-4 Panel types 220-240
4-AB2-5 Panel types 300-320
4-AB2-6 Panel types 400-421
4-AB2-7 Panel dimension schedule
4-AB2-8 Column type 100
4-AB2-9 Column type 300
4-AB2-10 Column type 400 & 500
4-AB2-11 Detail 1
4-AB2-12 Column splice 411-493 & 681-693
4-AB2-13 Column splice 101-113
4-AB2-14 Column splice 121-123
4-AB2-15 Column splice schedule
4-AB2-16 Column splice details
4-AB2-17 Welding Electrodes
4-AB2-18 Detail 2
4-AB2-19 Detail 3
4-AB2-19.1 DETAIL 3
4-AB2-20 DETAIL 3A
4-AB2-21 DETAIL 4 & 5
4-AB2-22 Detail 6
4-AB2-23 Detail 7
4-AB2-24 Detail 8
4-AB2-25 Weld #10
4-AB2-26 Spandrel connection details 101-135
4-AB2-27 Spandrel connection details 201-301
4-AB2-28 Spandrel connection details 401-416
4-AB2-29 Spandrel connection splice plate
4-AB2-30 Spandrel connection Schedule
4-AB2-31 Seat details 4013-3511
4-AB2-32 Seat details 4064-4731
4-AB2-33 Exterior wall seat details
4-AB2-33.1 Exterior wall seat details
4-AB2-34 Seat details 7010-7494
4-AB2-35 Seat Detail Schedule I
4-AB2-36 Seat Detail Schedule II
4-AB2-37 Seat Detail Schedule III

LICENSED PROFESSIONAL ENGINEER LESLIE E. ROBERTSON No. 34360 UNIVERSITY OF THE STATE OF NEW YORK

WORTHINGTON, SKILLING, HELLE & JACKSON — Civil & Structural Engineers

PROJECT: THE WORLD TRADE CENTER | TITLE: EXTERIOR WALL - PANEL TYPES 100 - 150 | DATE: 6-5-67

REVISIONS

7-18-69

Note: See 4-AB2-7 for dimension schedule

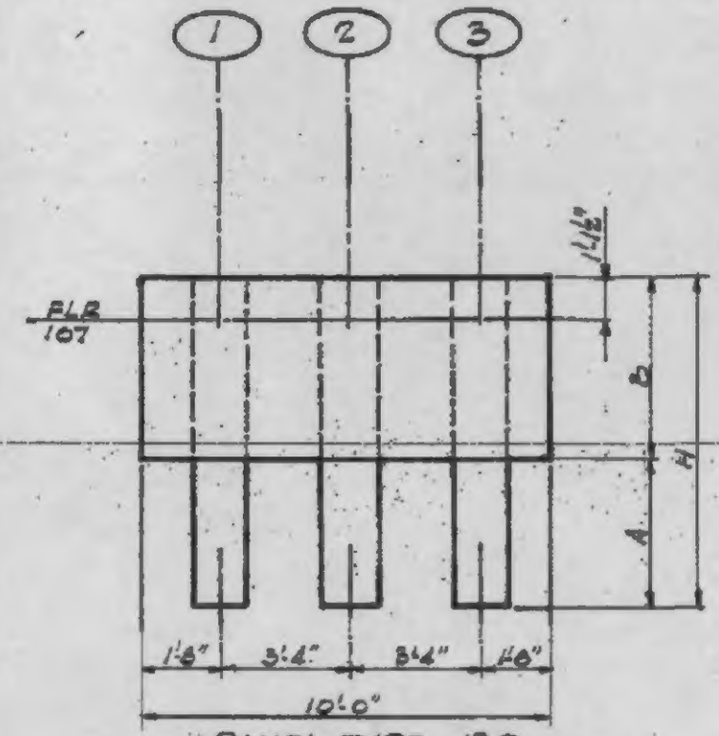

PANEL TYPE 130

Cols. 1 & 3 - Details 1 & 3
Col. 2 - Details 1 & 3

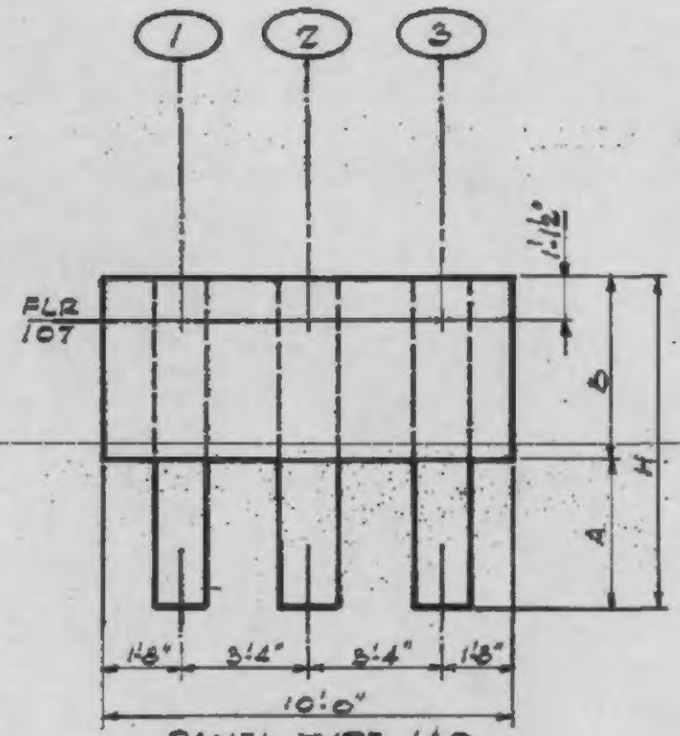

PANEL TYPE 140

Cols. 1 & 3 - Details 1 & 3
Col. 2 - Details 1 & 3

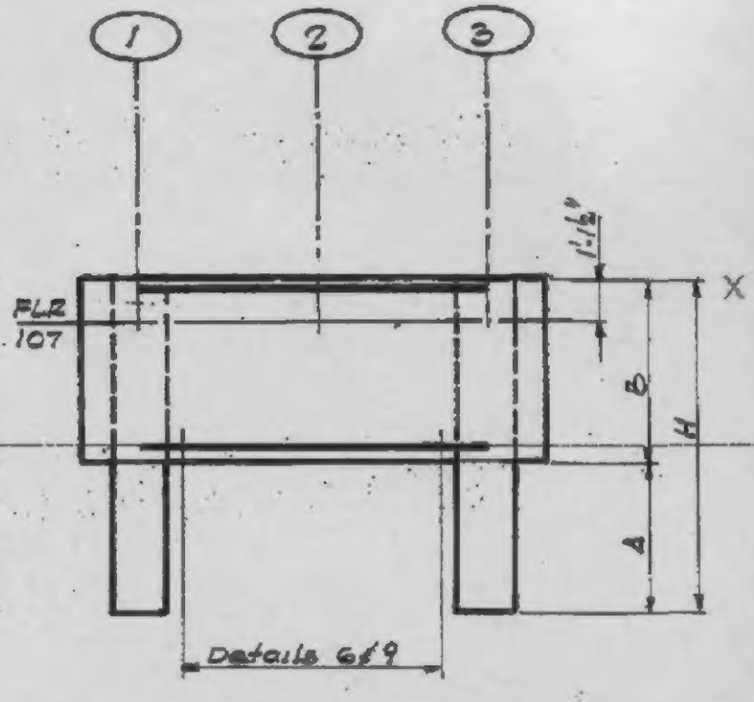

PANEL TYPE 150

Cols. 1 & 3 - Details 1 & 3

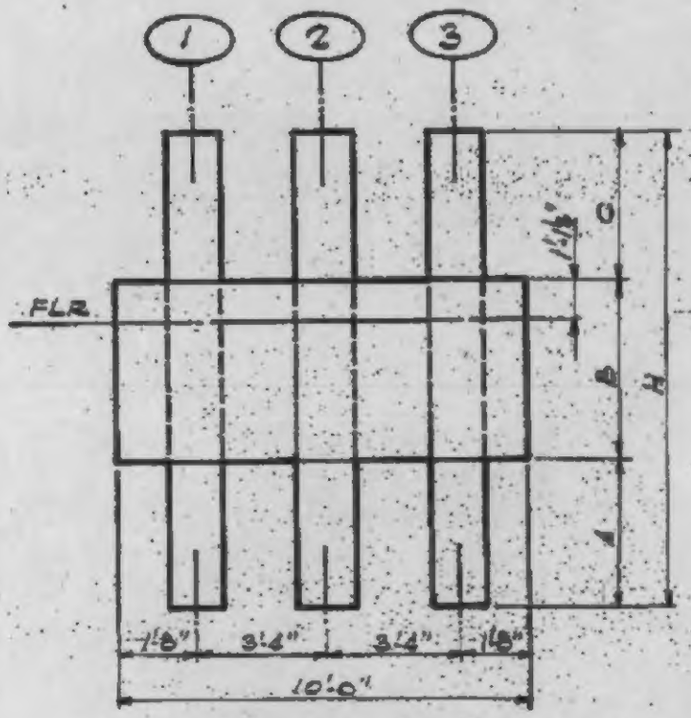

PANEL TYPES 100-102

Detail 1

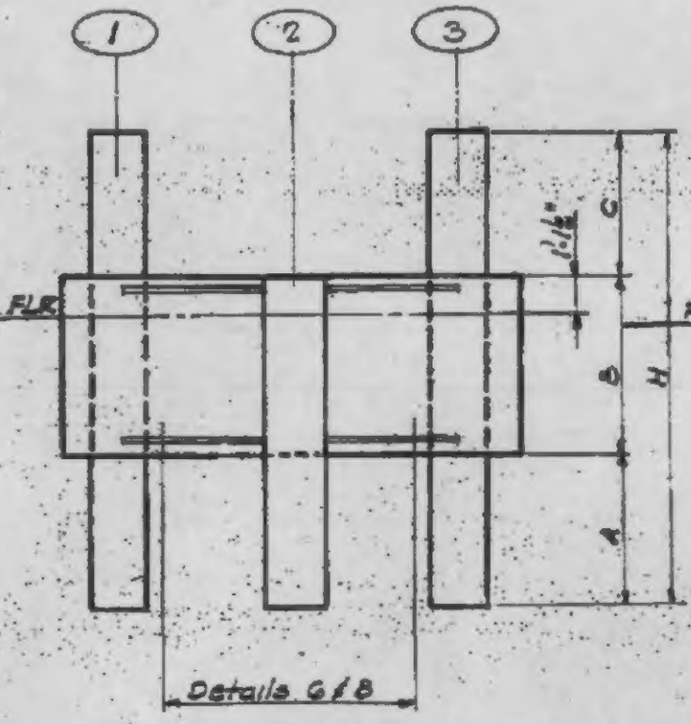

PANEL TYPES 110-112

Cols. 1 & 3 - Detail 1
Col. 2 - Details 1 & 4

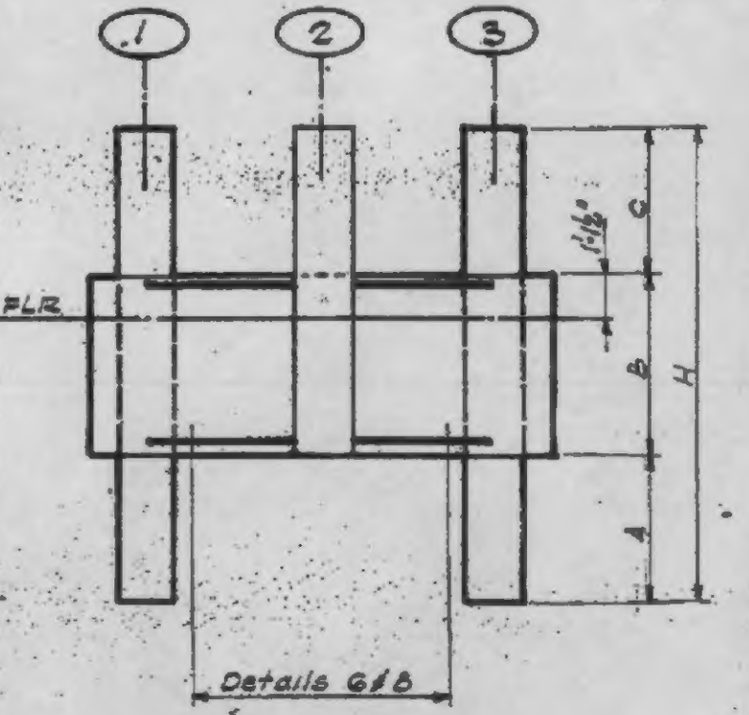

PANEL TYPE 120

Cols. 1 & 3 - Detail 1
Col. 2 - Details 1 & 4

4-AB2-2

LICENSED PROFESSIONAL ENGINEER
LESLIE E. ROBERTSON
No. 34360
UNIVERSITY OF THE STATE OF NEW YORK

WORTHINGTON, SKILLING, HELLE & JACKSON — Civil & Structural Engineers

PROJECT THE WORLD TRADE CENTER | TITLE EXTERIOR WALL - PANEL TYPES 200-216 | DATE 5-11-67

REVISIONS

Note: See 4-AB2-7 for dimension schedule

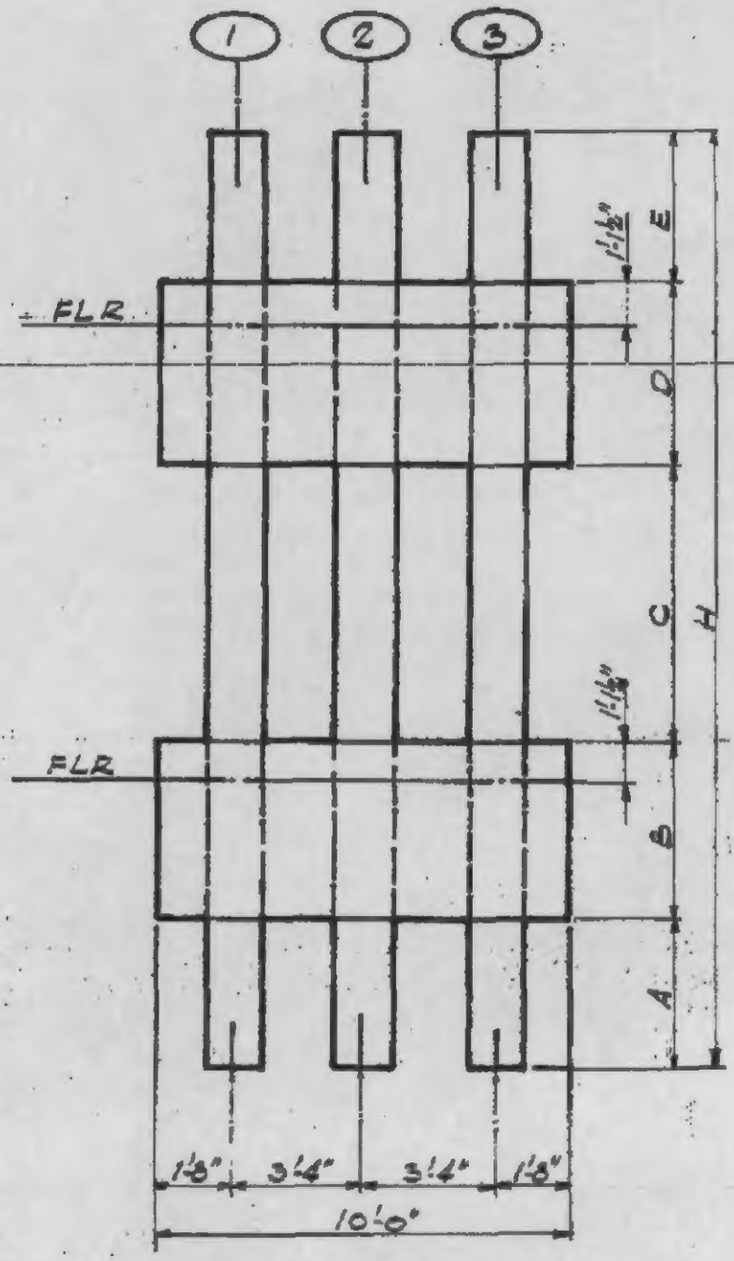

PANEL TYPES 200-202
Cols. 1, 2 & 3 - Detail 1

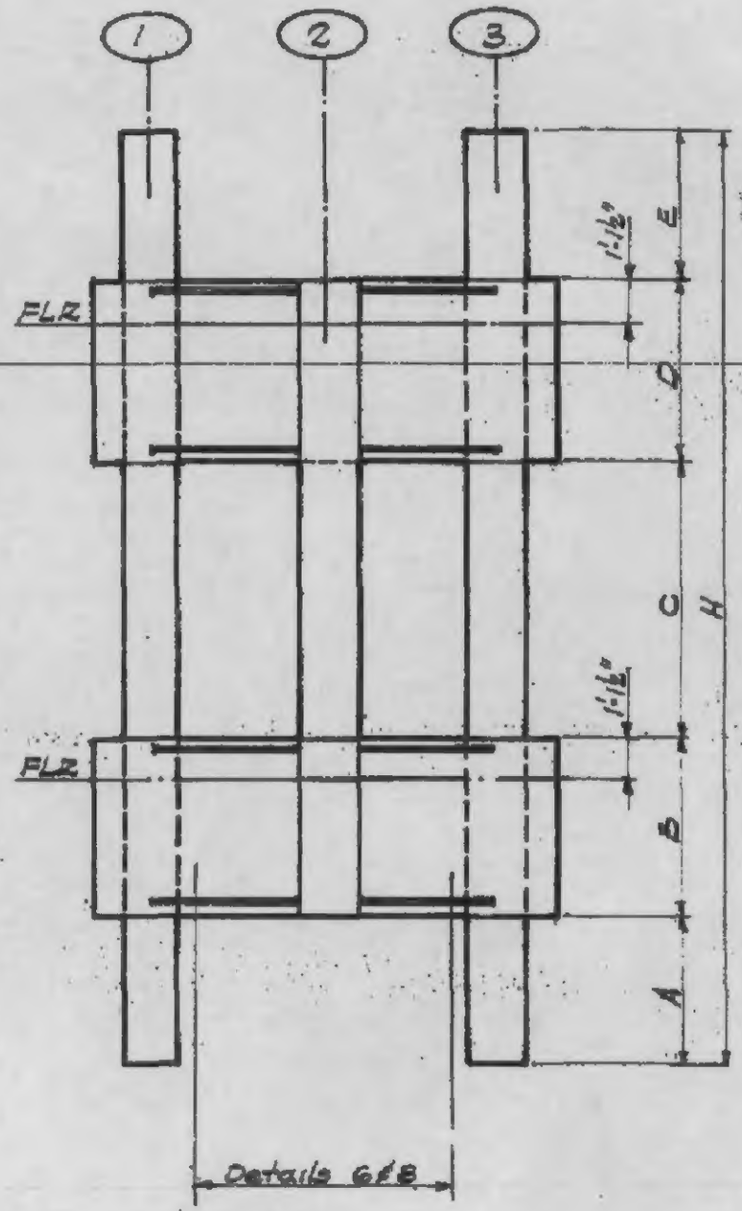

PANEL TYPES 210-216
Cols. 1 & 3 - Detail 1
Col. 2 - Detail 4

LICENSED PROFESSIONAL ENGINEER
LESLIE E. ROBERTSON
No. 34200
UNIVERSITY OF THE STATE OF NEW YORK

WORTHINGTON, SKILLING, HELLE & JACKSON — Civil & Structural Engineers

PROJECT: THE WORLD TRADE CENTER | TITLE: EXTERIOR WALL - PANEL TYPES 220-240 | DATE: 5-11-67

REVISIONS

7-18-69

Note: See 4-AB2-7 for dimension schedule

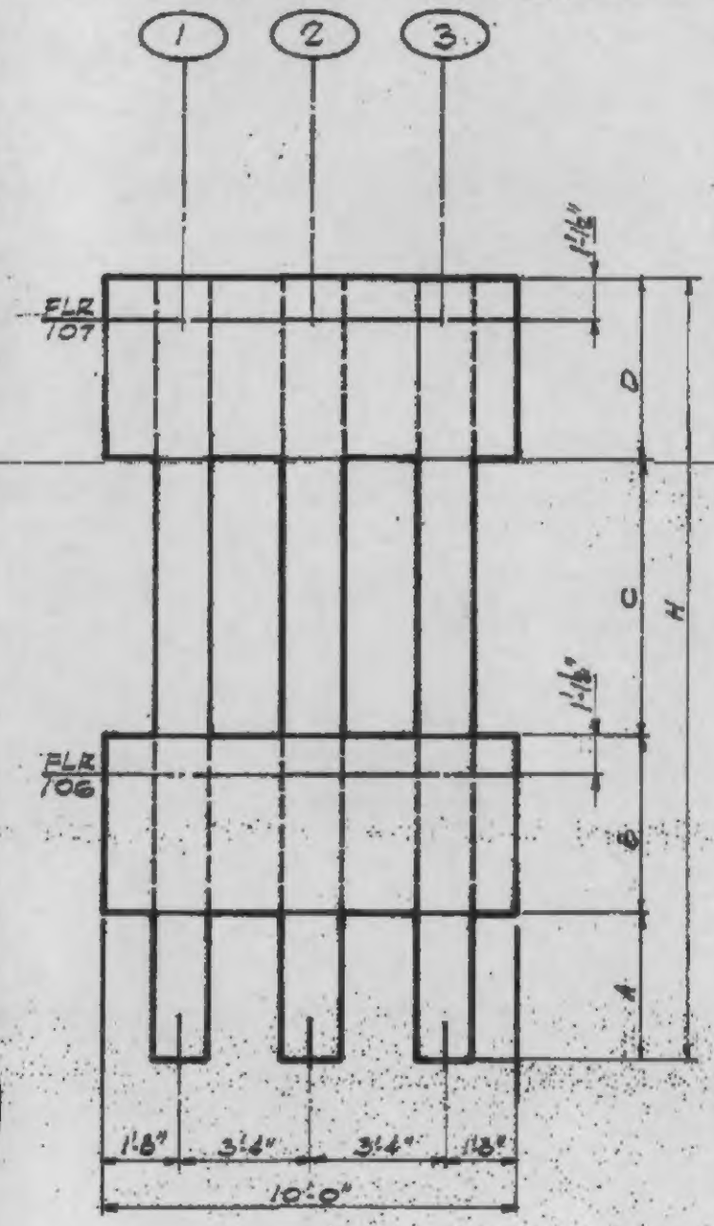

PANEL TYPE 220

Cols. 1 & 3 - Details 1 & 3
Col. 2 - Details 1 & 3

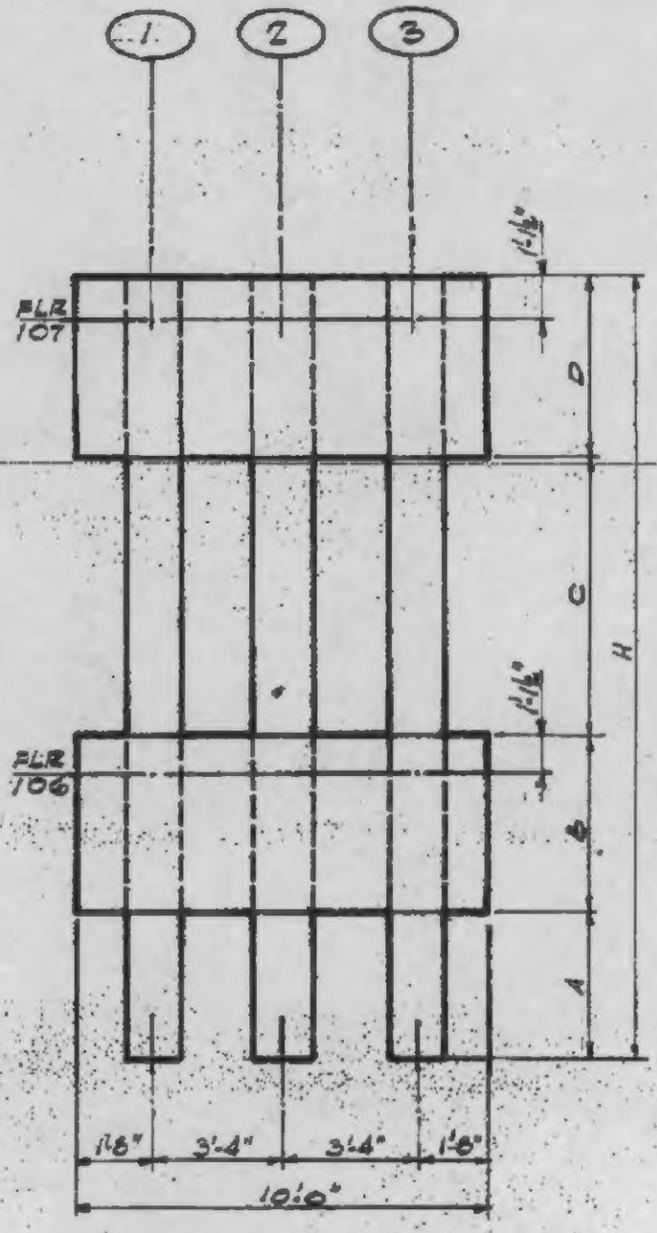

PANEL TYPE 230

Cols. 1 & 3 - Details 1 & 3
Col. 2 - Details 1 & 3

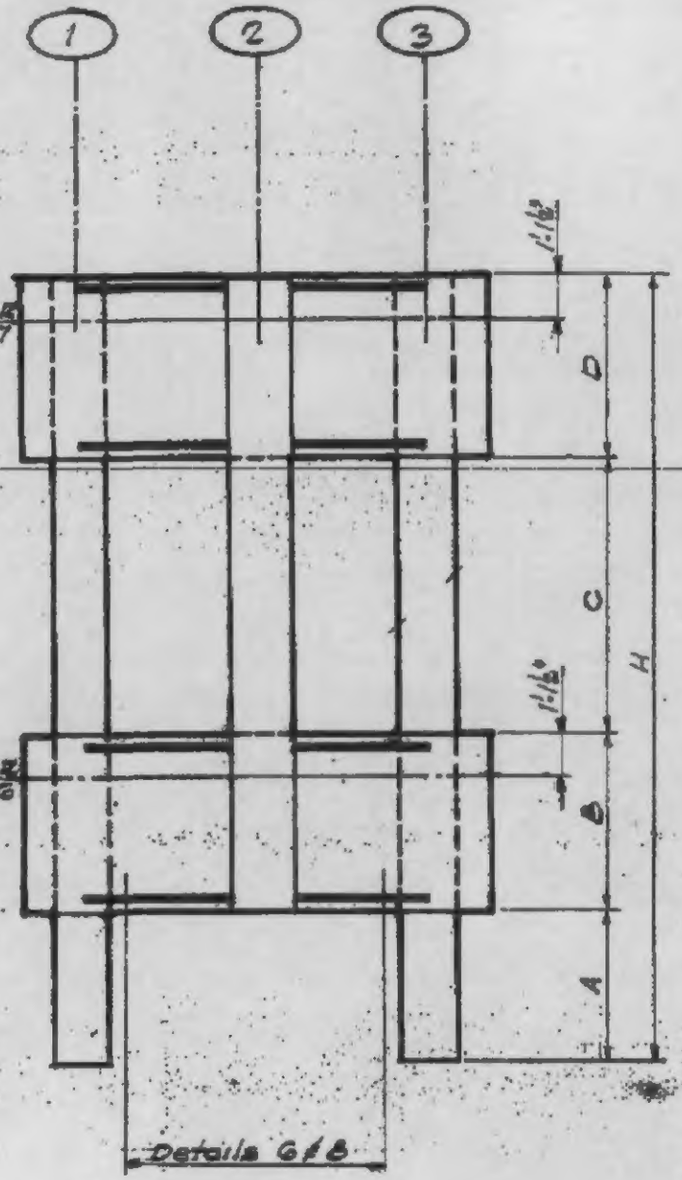

PANEL TYPE 240

Cols. 1 & 3 - Details 1 & 3
Col. 2 - Detail 4

4-AB2-4

WORTHINGTON, SKILLING, HELLE & JACKSON — Civil & Structural Engineers

PROJECT: THE WORLD TRADE CENTER | TITLE: EXTERIOR WALL - PANEL TYPES 300-320 | DATE: 5-11-67

REVISIONS

7-18-69

Note: See 4-AB2-7 for dimension schedule

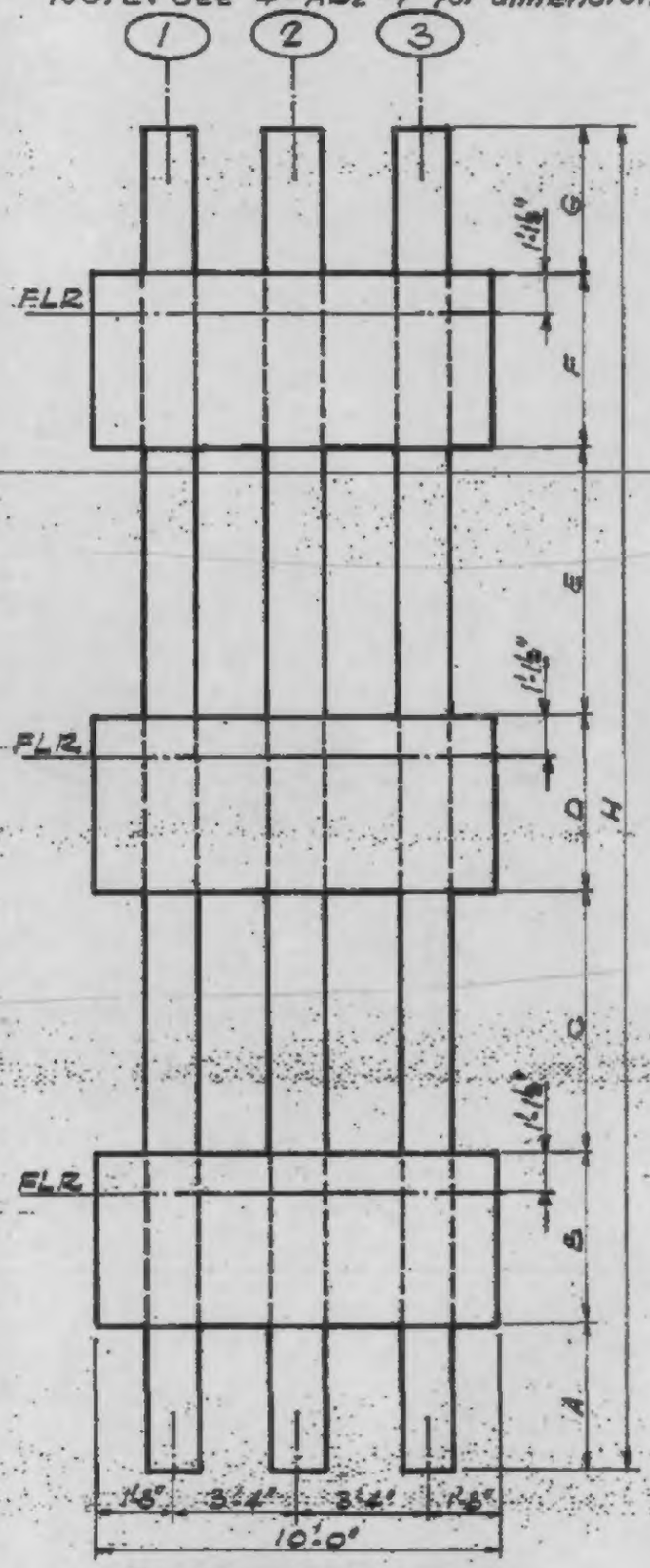

PANEL TYPES 300-307
Cols. 1, 2 & 3 - Detail 1

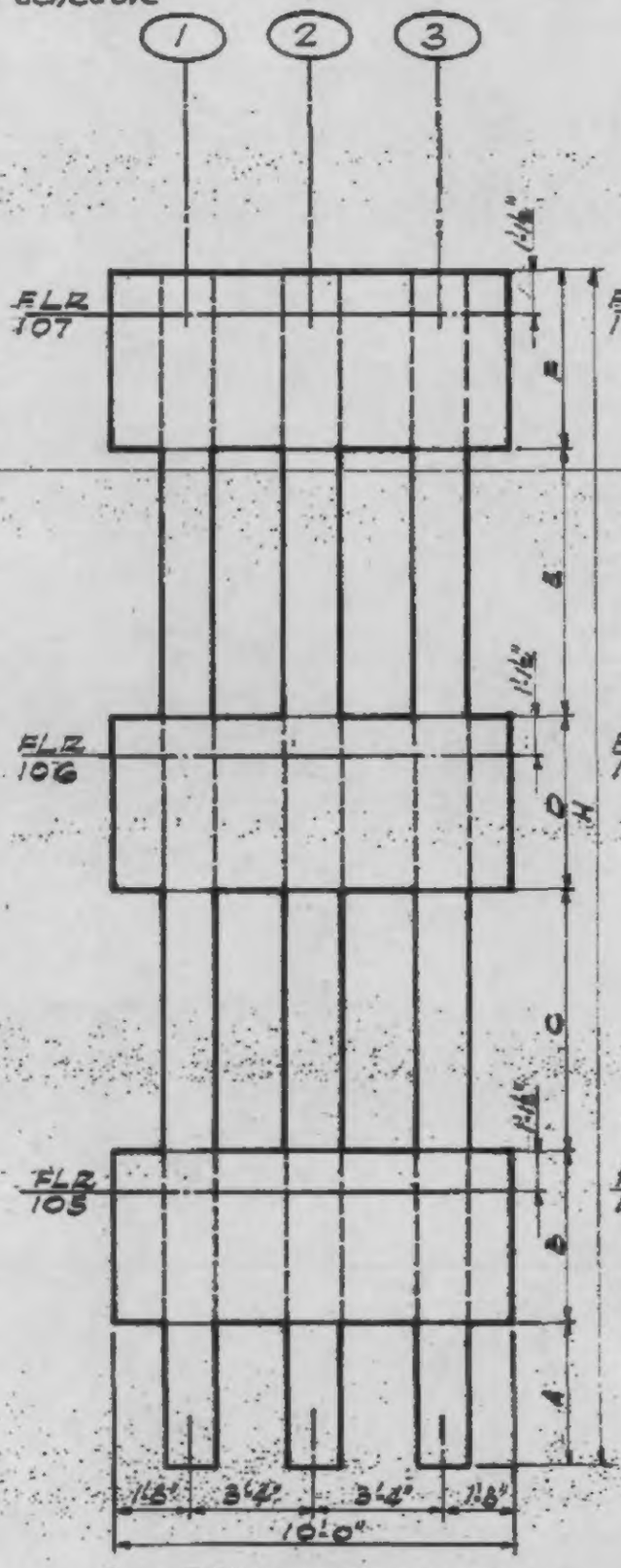

PANEL TYPE 310
Cols. 1 & 3 - Details 1 & 3
Col. 2 - Details 1 & 3

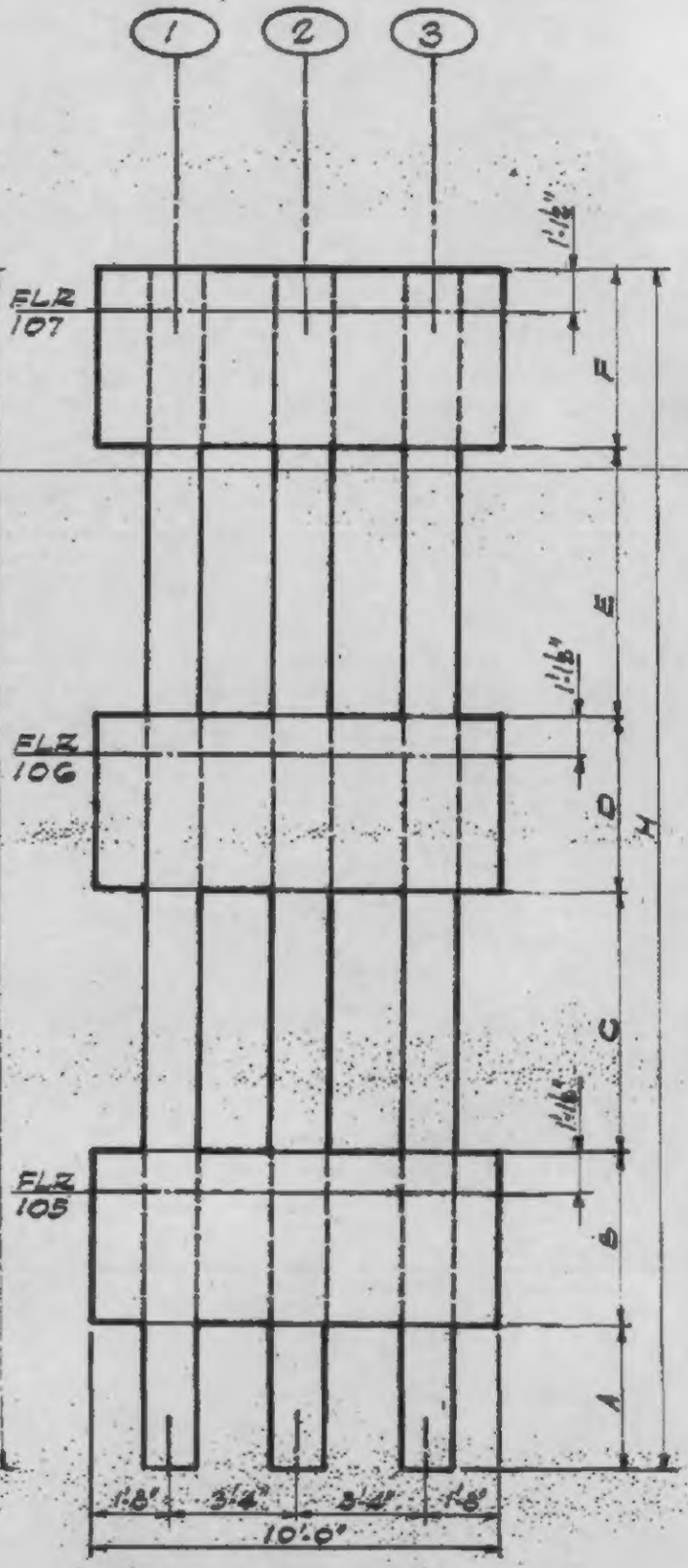

PANEL TYPE 320
Cols. 1 & 3 - Details 1 & 3
Col. 2 - Details 2 & 3

4-AB2-5

WORTHINGTON, SKILLING, HELLE & JACKSON — Civil & Structural Engineers

PROJECT: THE WORLD TRADE CENTER | TITLE: EXTERIOR WALL - PANEL TYPES 400-421 | DATE: 5-11-67

REVISIONS

Note: See 4-AB2-7 for dimension schedule

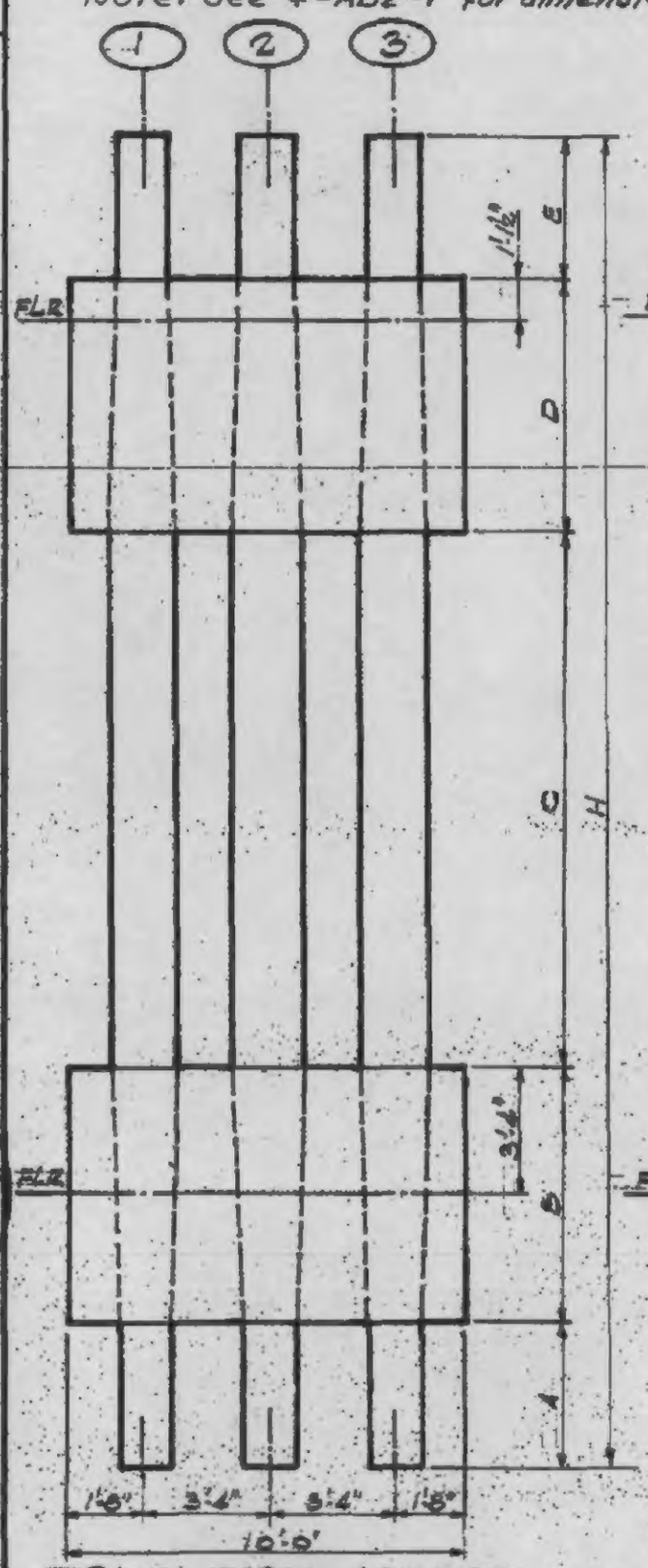

PANEL TYPES 400-401
Cols. 1, 2 & 3 - Detail 2

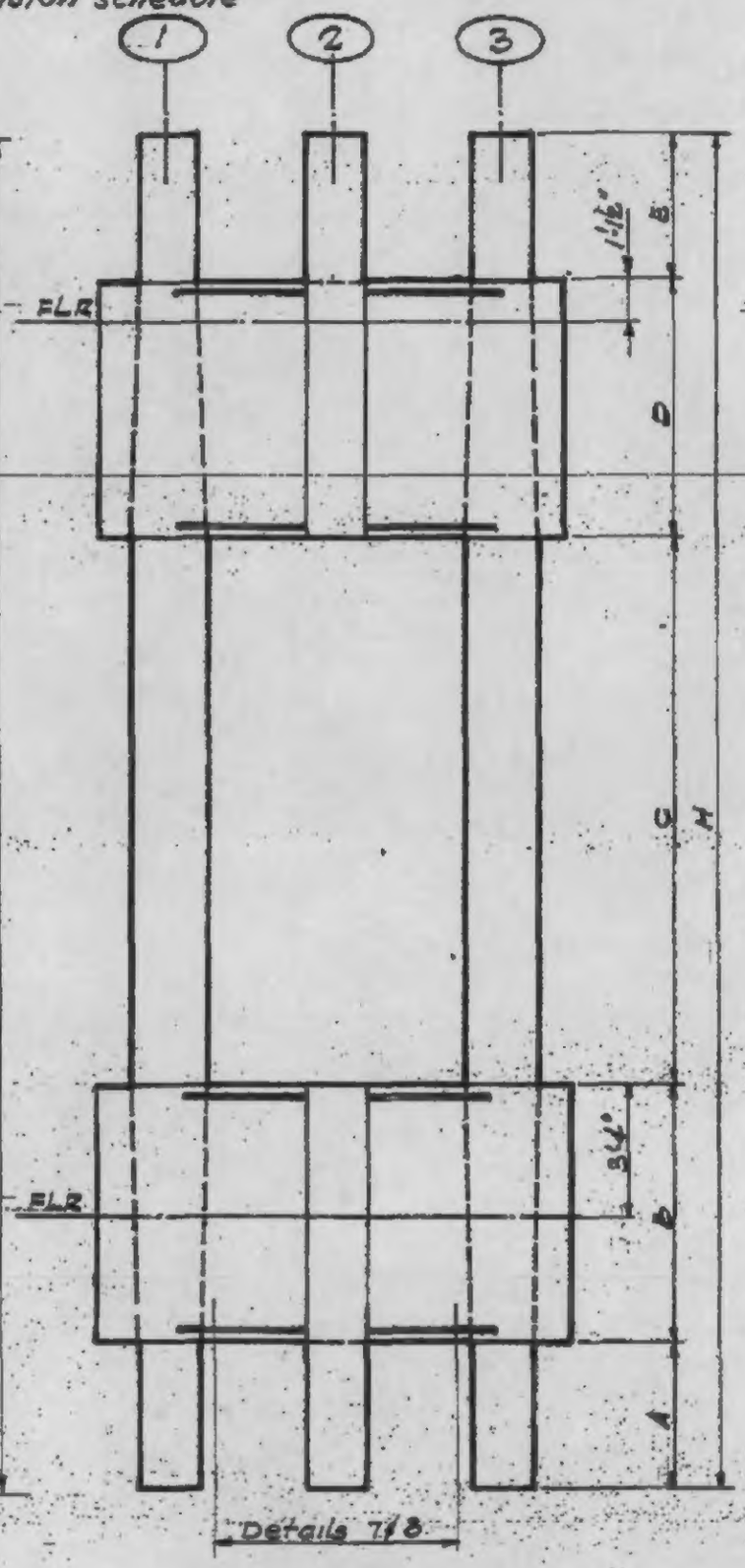

PANEL TYPES 410-411
Cols. 1 & 3 - Detail 2
Col. 2 - Details 1 & 5

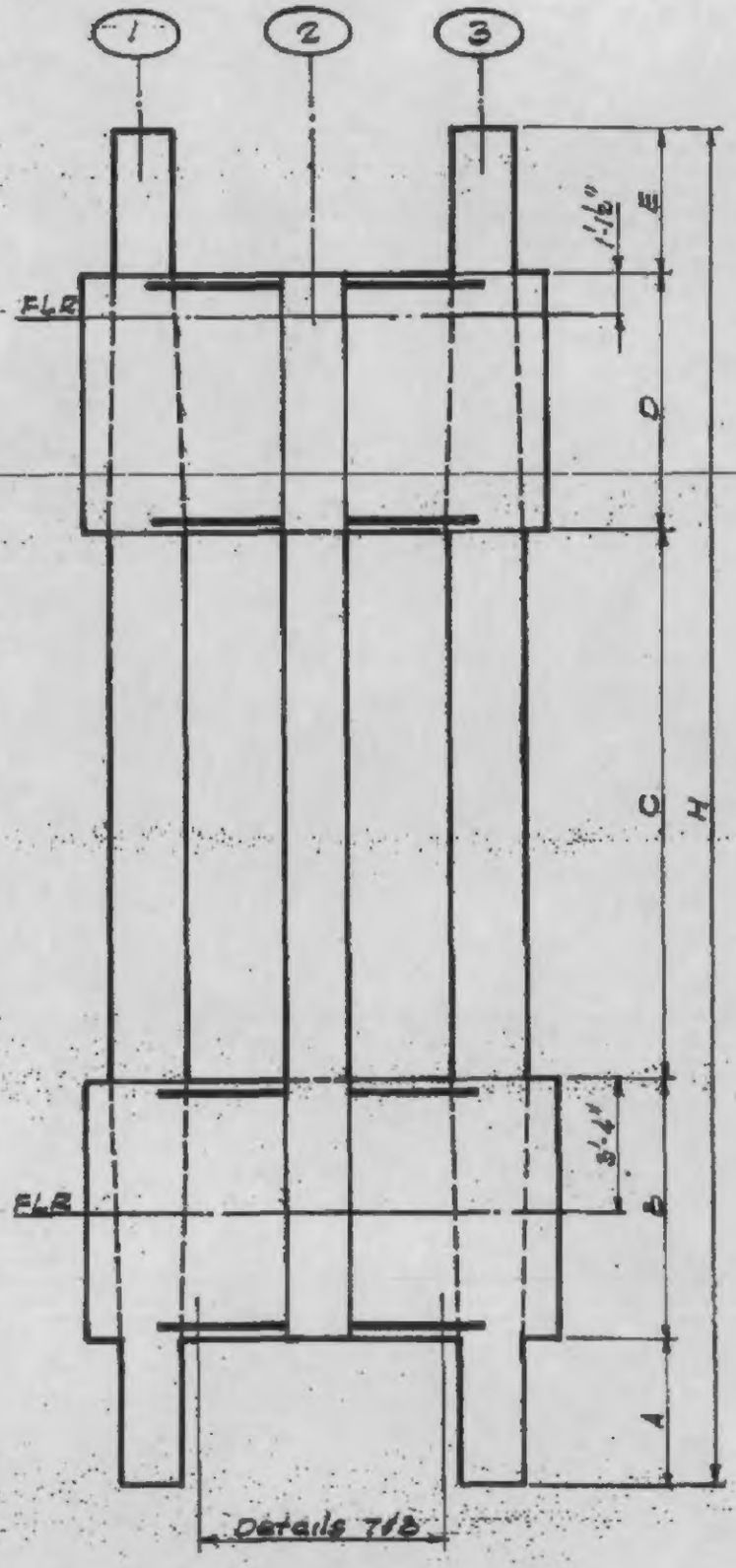

PANEL TYPES 420-421
Cols. 1 & 3 - Detail 2
Col. 2 - Detail 5

4-AB2-6

LESLIE E. ROBERTSON — LICENSED PROFESSIONAL ENGINEER — No. 34360 — UNIVERSITY OF THE STATE OF NEW YORK

SKILLING-HELLE-CHRISTIANSEN-ROBERTSON — **Civil & Structural Engineers**

PROJECT	TITLE	DATE
T E WORLD TRADE CENTER	EXTERIOR WALL - PANEL DIMENSIONS SCHEDULE	11- 7-67

REVISIONS

DIMENSIONS IN FEET AND INCHES

PANEL TYPE	A	B	C	D	E	F	G	H
100	3-10	4- 4	3-10					12-0
101	3-10	4- 4	4- 4					12-6
102	4- 4	5- 4	4- 4					14-0
110	3-10	4- 4	3-10					12-0
111	3-10	4- 4	4- 4					12-6
112	4- 4	5- 4	4- 4					14-0
120	3-10	4- 4	3-10					12-0
130	3-10	6- 8						10-6
140	3-10	6- 8						10-6
150	3-10	6- 8						10-6
200	3-10	4- 4	7- 8	4- 4	3-10			24-0
201	3-10	4- 4	8- 8	5- 4	3-10			26-0
202	4- 4	5- 4	8- 8	5- 4	3-10			27-6
210	3-10	4- 4	7- 8	4- 4	3-10			24-0
211	3-10	4- 4	7- 8	4- 4	5- 3			25-5
212	4- 4	5- 4	7- 8	4- 4	3-10			25-6
213	3-10	4- 4	8- 8	5- 4	3-10			26-0
214	5- 3	5- 6	7- 8	4- 4	3-10			26-7
215	4- 4	5- 4	8- 8	5- 4	3-10			27-6
216	3-10	4- 4	10- 6	5- 6	3-10			28-0
220	3-10	4- 4	7- 8	6- 8				22-6
230	3-10	4- 4	7- 8	6- 8				22-6
240	3-10	4- 4	7- 8	6- 8				22-6
300	3-10	4- 4	7- 8	4- 4	7- 8	4- 4	3-10	36-0
301	3-10	4- 4	7- 8	4- 4	7- 8	4- 4	5- 3	37-5
302	4- 4	5- 4	7- 8	4- 4	7- 8	4- 4	3-10	37-6
303	3-10	4- 4	8- 8	5- 4	7- 8	4- 4	3-10	38-0
304	5- 3	5- 6	7- 8	4- 4	7- 8	4- 4	3-10	38-7
305	4- 4	5- 4	8- 8	5- 4	7- 8	4- 4	3-10	39-6
306	3-10	4- 4	7- 8	4- 4	10- 6	5- 6	3-10	40-0
307	3-10	4- 4	10- 6	5- 6	7- 8	4- 4	3-10	40-0
310	3-10	4- 4	7- 8	4- 4	7- 8	6- 8		34-6
320	3-10	4- 4	7- 8	4- 4	7- 8	6- 8		34-6
400	4- 1-1/2	8- 3	17- 6-1/2	8- 3	3-10			42-0
401	4- 1-1/2	8- 3	17- 6-1/2	8- 3	4- 4			42-6
410	4- 1-1/2	8- 3	17- 6-1/2	8- 3	3-10			42-0
411	4- 1-1/2	8- 3	17- 6-1/2	8- 3	4- 4			42-6
420	4- 1-1/2	8- 3	17- 6-1/2	8- 3	3-10			42-0
421	4- 1-1/2	8- 3	17- 6-1/2	8- 3	4- 4			42-6

Note: See 4-AB2-2 to 4-AB2-6 for panel types

LICENSED PROFESSIONAL ENGINEER — LESLIE E. ROBERTSON — No. 34360 — UNIVERSITY OF THE STATE OF NEW YORK

WORTHINGTON, SKILLING, HELLE & JACKSON — Civil & Structural Engineers

PROJECT: THE WORLD TRADE CENTER | TITLE: EXTERIOR WALL - COLUMN TYPE 100 | DATE: 6-5-67

REVISIONS

3/16/70

COLUMN TYPE	PLATE 1 T1 (IN)	PLATE 2 T2 (IN)	PLATE 3 T3 (IN)	WELD 1 IN	WELD 2 IN	WELD 3 IN
120	1/4	1/4	1/4	1/4	1/4	5/16
121	5/16	1/4	1/4	5/16	1/4	5/16
122	3/8	1/4	1/4	5/16	1/4	5/16
123	7/16	1/4	1/4	3/8	1/4	3/8
124	1/2	1/4	1/4	3/8	1/4	3/8
125	9/16	1/4	1/4	3/8	5/16	3/8
126	5/8	1/4	1/4	3/8	5/16	3/8
127	11/16	1/4	1/4	3/8	5/16	3/8
128	3/4	1/4	1/4	3/8	5/16	3/8
129	13/16	5/16	5/16	1/2	5/16	1/2
130	7/8	5/16	5/16	1/2	5/16	1/2
131	15/16	5/16	5/16	1/2	5/16	1/2
132	1	3/8	3/8	1/2	5/16	1/2
133	1- 1/16	3/8	3/8	1/2	5/16	1/2
134	1- 1/8	3/8	3/8	1/2	5/16	1/2
135	1- 3/16	7/16	7/16	1/2	5/16	1/2
136	1- 1/4	7/16	7/16	1/2	5/16	1/2
137	1- 5/16	7/16	7/16	1/2	3/8	1/2
138	1- 3/8	1/2	1/2	1/2	3/8	1/2
139	1- 7/16	1/2	1/2	1/2	3/8	1/2
140	1- 1/2	1/2	1/2	1/2	3/8	1/2
141	1- 9/16	9/16	9/16	1/2	3/8	1/2
142	1- 5/8	9/16	9/16	1/2	3/8	1/2
143	1-11/16	9/16	9/16	1/2	3/8	1/2
144	1- 3/4	5/8	5/8	1/2	3/8	1/2
145	1-13/16	5/8	5/8	5/8	3/8	5/8
146	1- 7/8	5/8	5/8	5/8	3/8	5/8
147	1-15/16	11/16	11/16	5/8	3/8	5/8
148	2	11/16	11/16	5/8	3/8	5/8
149	2- 1/16	11/16	11/16	5/8	3/8	5/8
150	2- 1/8	3/4	3/4	5/8	3/8	5/8
151	2- 3/16	3/4	3/4	5/8	3/8	5/8
152	2- 1/4	3/4	3/4	5/8	3/8	5/8
153	2- 5/16	13/16	13/16	5/8	1/2	5/8
154	2- 3/8	13/16	13/16	5/8	1/2	5/8
155	2- 7/16	13/16	13/16	5/8	1/2	5/8
156	2- 1/2	7/8	7/8	5/8	1/2	5/8
157	2- 9/16	7/8	7/8	5/8	1/2	5/8
158	2- 5/8	7/8	7/8	5/8	1/2	5/8
159	2-11/16	15/16	15/16	5/8	1/2	5/8
160	2- 3/4	15/16	15/16	5/8	1/2	5/8
161	2-13/16	15/16	15/16	5/8	1/2	5/8
162	2- 7/8	1	1	5/8	1/2	5/8
163	2-15/16	1	1	5/8	1/2	5/8
164	3	1	1	5/8	1/2	5/8

Note: Weld 1 and 3 use Electrode 1. See 4-AB2-17
Weld 2 use Electrode 2. See 4-AB2-17

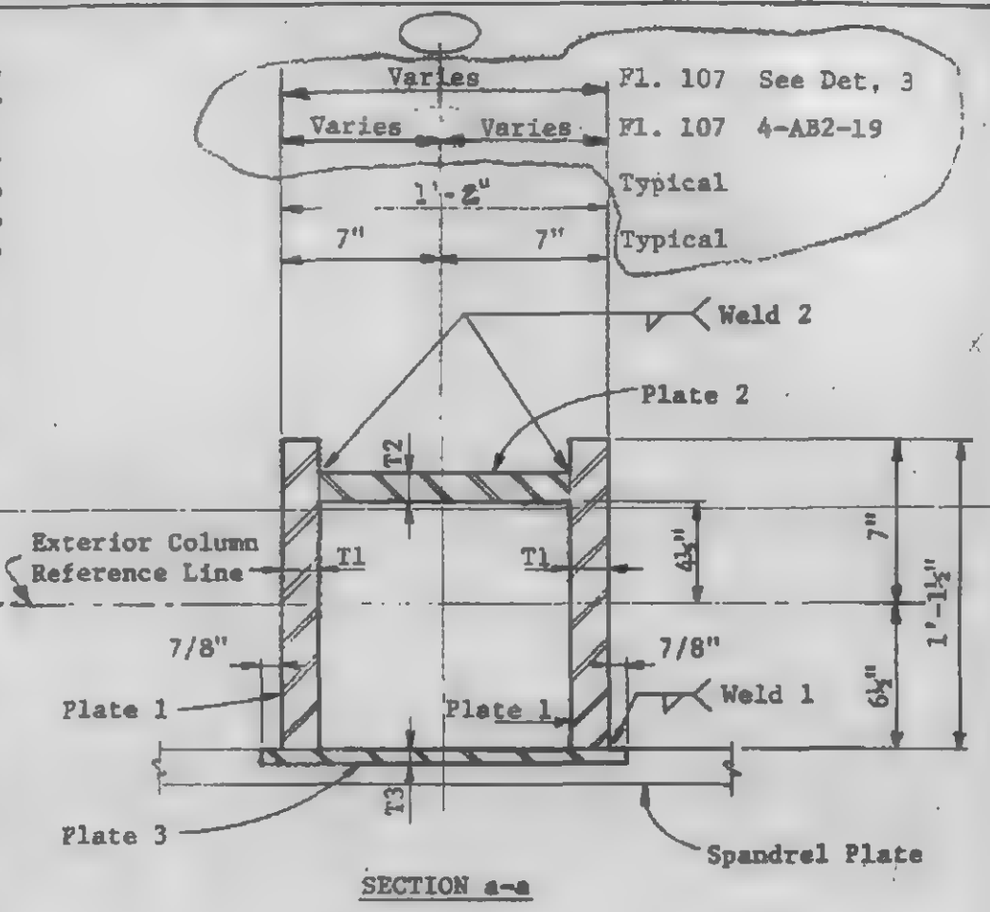

SECTION a-a
(See 4-AB2-11)

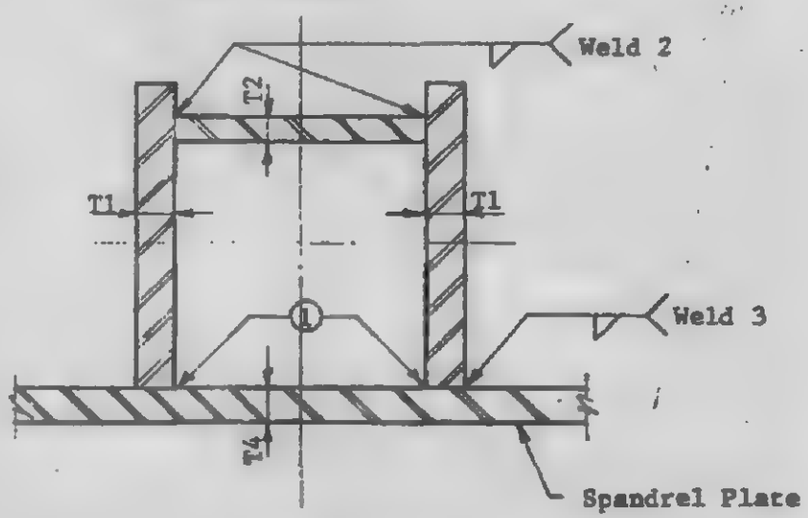

1 Weld 5 or 7; see 4-AB2-11

SECTION b-b
(See 4-AB2-11)

LICENSED PROFESSIONAL ENGINEER LESLIE E. ROBERTSON No. 34360 CITY OF THE STATE OF NEW YORK

WORTHINGTON, SKILLING, HELLE & JACKSON — Civil & Structural Engineers

PROJECT: THE WORLD TRADE CENTER | TITLE: EXTERIOR WALL – COLUMN TYPE 300 | DATE: 6- 5-67

REVISIONS

COLUMN TYPE	PLATE 1 T1 (IN)	PLATE 2 T2 (IN)	PLATE 3 T2 (IN)	WELD 1 IN	WELD 2 IN	WELD 3 IN	WELD 4 IN
320	1/4	1/4	1/4	1/4	1/4	5/16	1/4
321	5/16	1/4	1/4	5/16	1/4	5/16	5/16
322	3/8	1/4	1/4	5/16	1/4	5/16	5/16
323	7/16	1/4	1/4	3/8	1/4	3/8	1/2
324	1/2	1/4	1/4	3/8	1/4	3/8	1/2
325	9/16	1/4	1/4	3/8	5/16	3/8	1/2
326	5/8	1/4	1/4	3/8	5/16	3/8	1/2
327	11/16	1/4	1/4	3/8	5/16	3/8	1/2
328	3/4	1/4	1/4	3/8	5/16	3/8	1/2
329	13/16	5/16	5/16	1/2	5/16	1/2	3/4
330	7/8	5/16	5/16	1/2	5/16	1/2	3/4
331	15/16	5/16	5/16	1/2	5/16	1/2	3/4
332	1	3/8	3/8	1/2	5/16	1/2	3/4
333	1- 1/16	3/8	3/8	1/2	5/16	1/2	3/4
334	1- 1/8	3/8	3/8	1/2	5/16	1/2	3/4
335	1- 3/16	7/16	7/16	1/2	5/16	1/2	3/4
336	1- 1/4	7/16	7/16	1/2	5/16	1/2	3/4
337	1- 5/16	7/16	7/16	1/2	3/8	1/2	3/4
338	1- 3/8	1/2	1/2	1/2	3/8	1/2	3/4
339	1- 7/16	1/2	1/2	1/2	3/8	1/2	3/4
340	1- 1/2	1/2	1/2	1/2	3/8	1/2	3/4
341	1- 9/16	9/16	9/16	1/2	3/8	1/2	3/4
342	1- 5/8	9/16	9/16	1/2	3/8	1/2	3/4
343	1-11/16	9/16	9/16	1/2	3/8	1/2	3/4
344	1- 3/4	5/8	5/8	1/2	3/8	1/2	3/4
345	1-13/16	5/8	5/8	5/8	3/8	5/8	1
346	1- 7/8	5/8	5/8	5/8	3/8	5/8	1
347	1-15/16	11/16	11/16	5/8	3/8	5/8	1
348	2	11/16	11/16	5/8	3/8	5/8	1
349	2- 1/16	11/16	11/16	5/8	3/8	5/8	1
350	2- 1/8	3/4	3/4	5/8	3/8	5/8	1
351	2- 3/16	3/4	3/4	5/8	3/8	5/8	1
352	2- 1/4	3/4	3/4	5/8	3/8	5/8	1
353	2- 5/16	13/16	13/16	5/8	1/2	5/8	1
354	2- 3/8	13/16	13/16	5/8	1/2	5/8	1
355	2- 7/16	13/16	13/16	5/8	1/2	5/8	1
356	2- 1/2	7/8	7/8	5/8	1/2	5/8	1
357	2- 9/16	7/8	7/8	5/8	1/2	5/8	1
358	2- 5/8	7/8	7/8	5/8	1/2	5/8	1
359	2-11/16	15/16	15/16	5/8	1/2	5/8	1
360	2- 3/4	15/16	15/16	5/8	1/2	5/8	1

Note: Weld 1, 3 and 4 use Electrode 1. See 4-AB2-17
Weld 2 use Electrode 2. See 4-AB2-17.

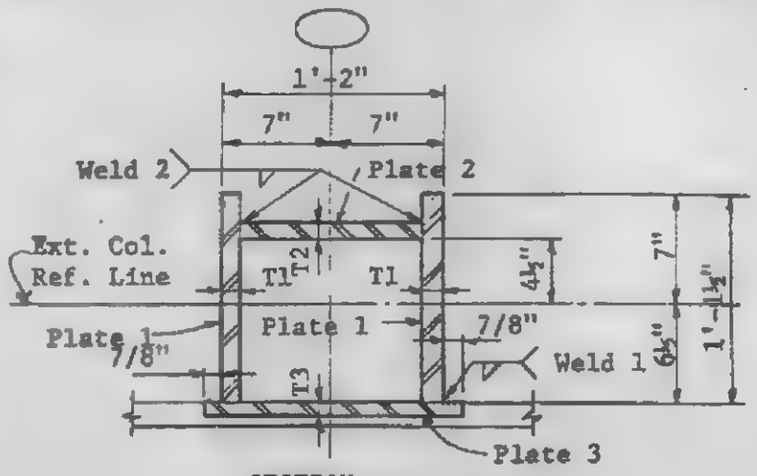

SECTION a-a
(See 4-AB2-18)

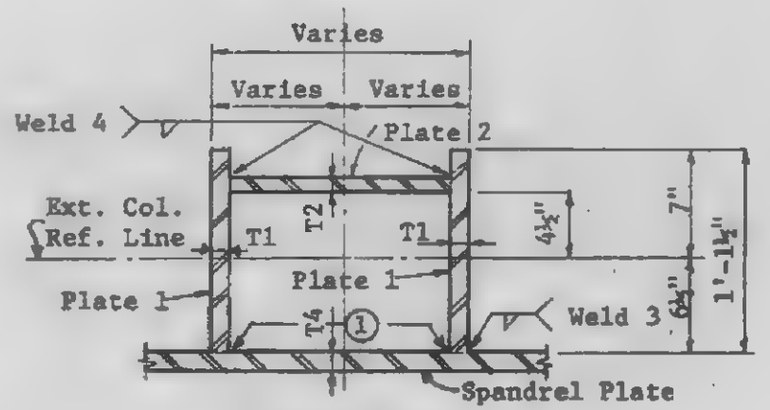

SECTION b-b
(See 4-AB2-18)

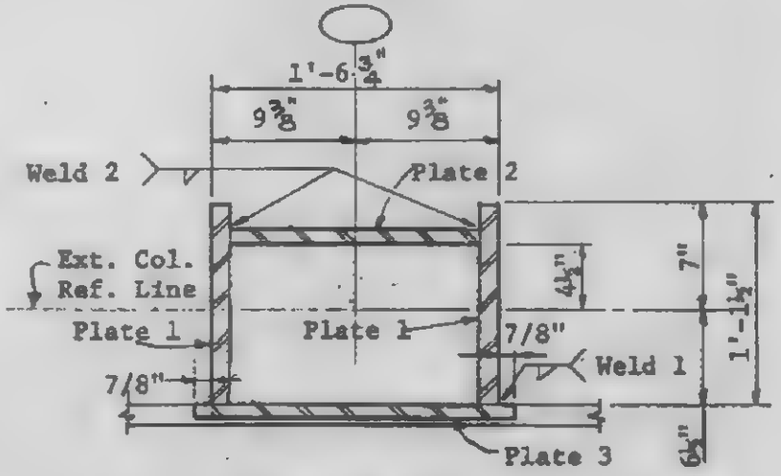

SECTION c-c
(See 4-AB2-18)
1 Weld 5 or 7; see 4-AB2-18

LICENSED PROFESSIONAL ENGINEER LESLIE E. ROBERTSON No. 34360 STATE OF NEW YORK

WORTHINGTON, SKILLING, HELLE & JACKSON — Civil & Structural Engineers

PROJECT THE WORLD TRADE CENTER | TITLE EXTERIOR WALL - COLUMN TYPES 400 AND 500 | DATE 6-5-67

REVISIONS

7-28-67

COLUMN TYPE	PLATE 1 T1 (IN)	PLATE 2 T2 (IN)	PLATE 3 T2 (IN)	WELD 1 IN	WELD 3 IN
430	7/8	5/16	5/16	1/2	1/2
431	15/16	5/16	5/16	1/2	1/2
432	1	3/8	3/8	1/2	1/2
433	1- 1/16	3/8	3/8	1/2	1/2
442	1- 5/8	9/16	9/16	1/2	1/2
443	1-11/16	9/16	9/16	1/2	1/2
444	1- 3/4	5/8	5/8	1/2	1/2
445	1-13/16	5/8	5/8	5/8	5/8
520	1/4	1/4	1/4	1/4	5/16
521	5/16	1/4	1/4	5/16	5/16
522	3/8	1/4	1/4	5/16	5/16
523	7/16	1/4	1/4	3/8	3/8
524	1/2	1/4	1/4	3/8	3/8
525	9/16	1/4	1/4	3/8	3/8
526	5/8	1/4	1/4	3/8	3/8
527	11/16	1/4	1/4	3/8	3/8
528	3/4	1/4	1/4	3/8	3/8
529	13/16	5/16	5/16	1/2	1/2
530	7/8	5/16	5/16	1/2	1/2
531	15/16	5/16	5/16	1/2	1/2
532	1	3/8	3/8	1/2	1/2
533	1- 1/16	3/8	3/8	1/2	1/2
534	1- 1/8	3/8	3/8	1/2	1/2
535	1- 3/16	7/16	7/16	1/2	1/2
536	1- 1/4	7/16	7/16	1/2	1/2
537	1- 5/16	7/16	7/16	1/2	1/2
538	1- 3/8	1/2	1/2	1/2	1/2
539	1- 7/16	1/2	1/2	1/2	1/2
540	1- 1/2	1/2	1/2	1/2	1/2
541	1- 9/16	9/16	9/16	1/2	1/2
542	1- 5/8	9/16	9/16	1/2	1/2
543	1-11/16	9/16	9/16	1/2	1/2
544	1- 3/4	5/8	5/8	1/2	1/2
545	1-13/16	5/8	5/8	5/8	5/8
546	1- 7/8	5/8	5/8	5/8	5/8
547	1-15/16	11/16	11/16	5/8	5/8
548	2	11/16	11/16	5/8	5/8
549	2- 1/16	11/16	11/16	5/8	5/8
550	2- 1/8	3/4	3/4	5/8	5/8
551	2- 3/16	3/4	3/4	5/8	5/8
552	2- 1/4	3/4	3/4	5/8	5/8
553	2- 5/16	13/16	13/16	5/8	5/8
554	2- 3/8	13/16	13/16	5/8	5/8
555	2- 7/16	13/16	13/16	5/8	5/8
556	2- 1/2	7/8	7/8	5/8	5/8
557	2- 9/16	7/8	7/8	5/8	5/8
558	2- 5/8	7/8	7/8	5/8	5/8

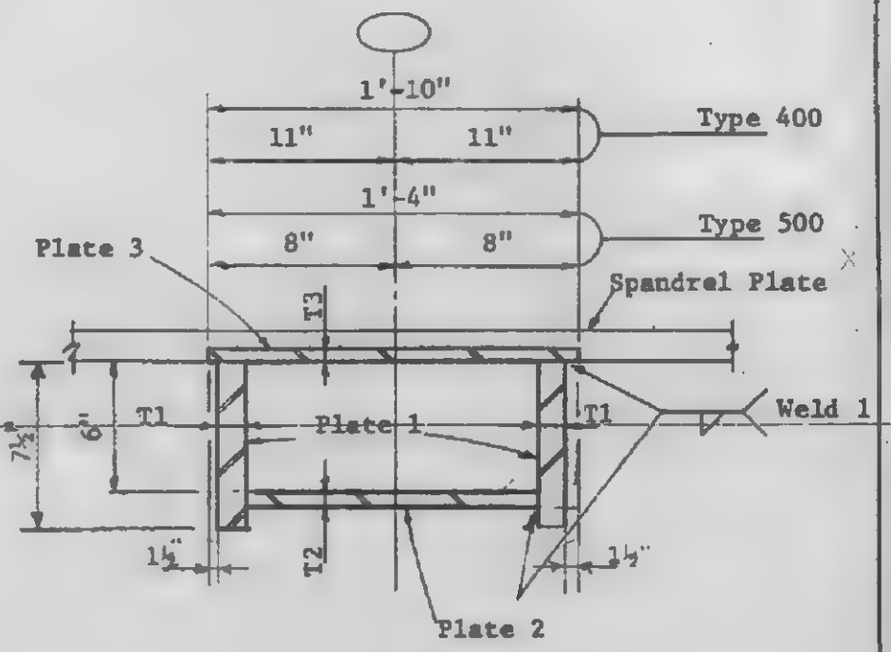

SECTION a-a

(See 4-AB2-21)

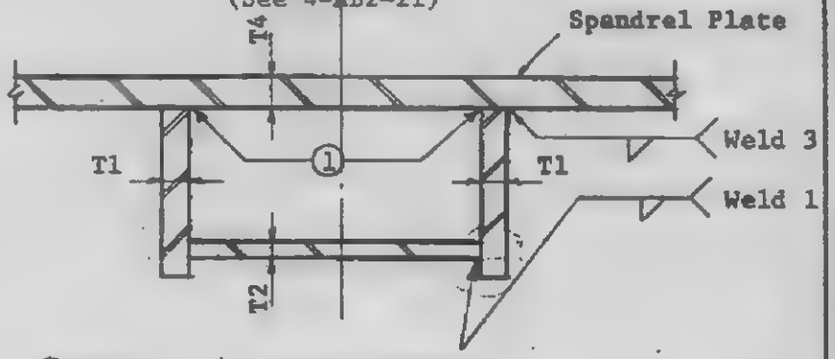

① Weld 5 or 7; see 4-AB2-21

SECTION b-b

(See 4-AB2-21)

Note: Weld 1 and 3 use Electrode 1. See 4-AB2-17

LICENSED PROFESSIONAL ENGINEER LESLIE E. ROBERTSON No. 34360 UNIVERSITY OF THE STATE OF NEW YORK

WORTHINGTON, SKILLING, HELLE & JACKSON — Civil & Structural Engineers

PROJECT THE WORLD TRADE CENTER | TITLE EXTERIOR WALL - DETAIL 1 | DATE 6-5-67

REVISIONS
11-7-67
3-16-70

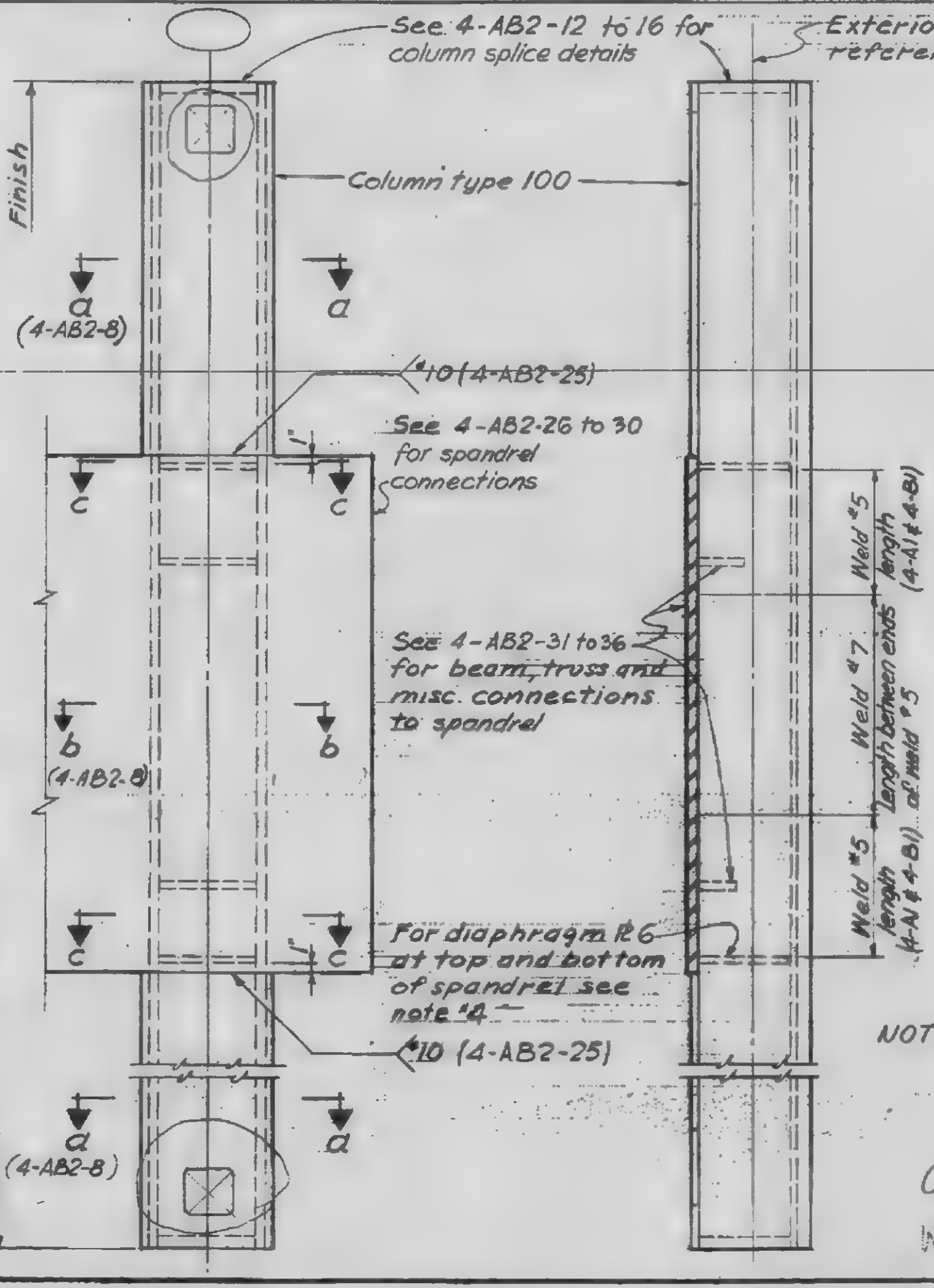

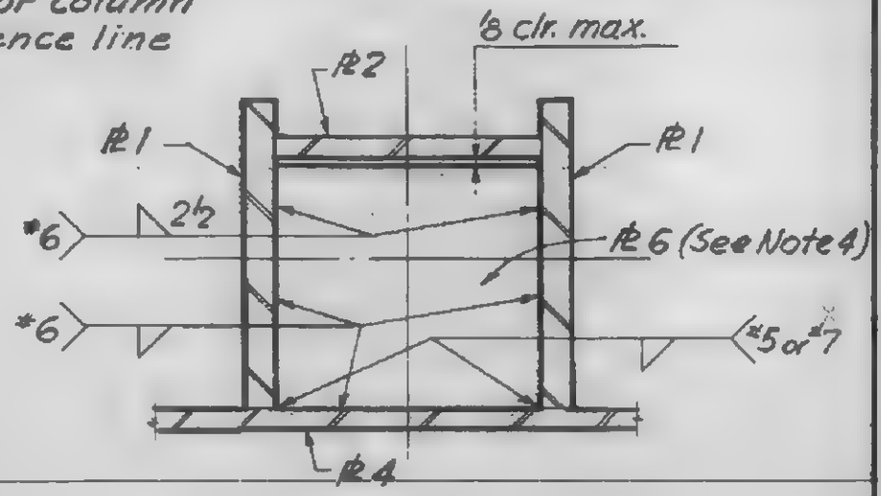

Section c-c

NOTES
1. See 4-AB2-8 for PLs 1, 2 and 3
2. See 4-A1 & 4-B1 for PL 4 and welds *5, *6 & *7
3. Electrodes for welds *5, *6 & *7 shall be Electrode 1. See 4-AB2-17
4. Fy of PL 6 to match Fy of PL 1. Thickness of PL 6 to be as shown:

Weld *6	PL 6
1/4	3/8
5/16	1/2
3/8	5/8
7/16	11/16
1/2	3/4
9/16	7/8
5/8	1
11/16	1-1/8

NOTE: Weld *5 & *7 required only where shown in 4-A1 & 4-B1

COMP. PEN.
WELD #10

LICENSED PROFESSIONAL ENGINEER — LESLIE E. ROBERTSON — No. 24360 — REGISTERED BY THE STATE OF NEW YORK

4-AB2-11

WORTHINGTON, SKILLING, HELLE & JACKSON — Civil & Structural Engineers

PROJECT: THE WORLD TRADE CENTER | TITLE: EXTERIOR WALL COLUMN SPLICE 411-493 & 681-693 | DATE: 6-5-67

REVISIONS

7-10-67
11-7-67
3-11-68

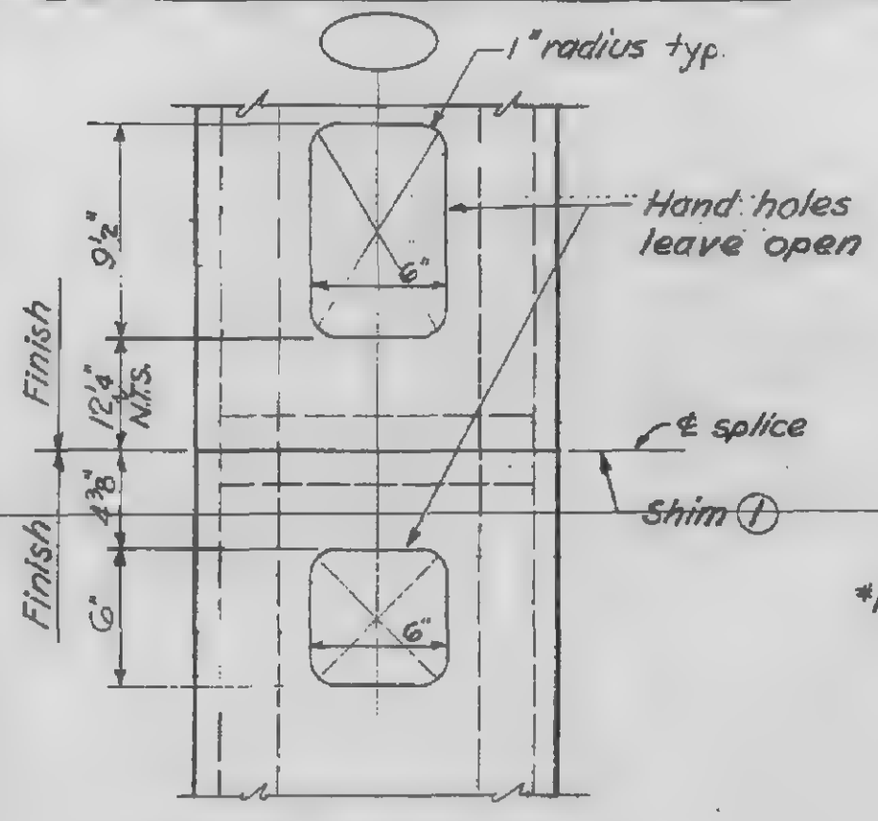

EXTERIOR ELEVATION

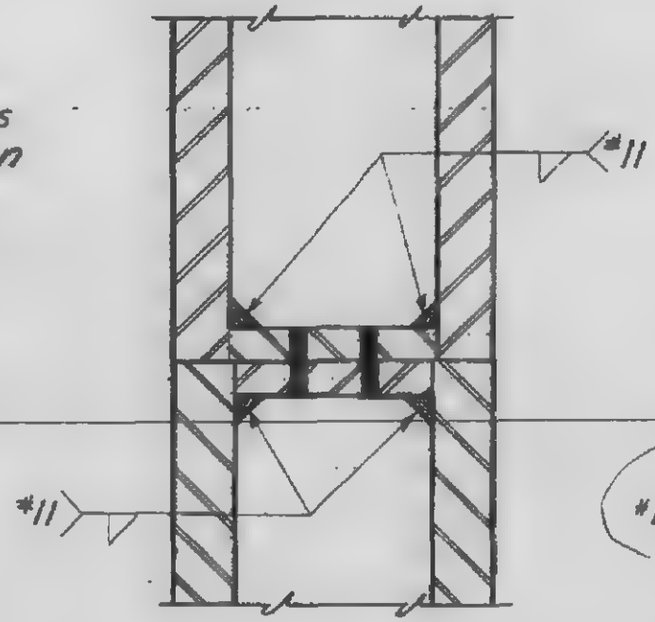

SECTION a-a

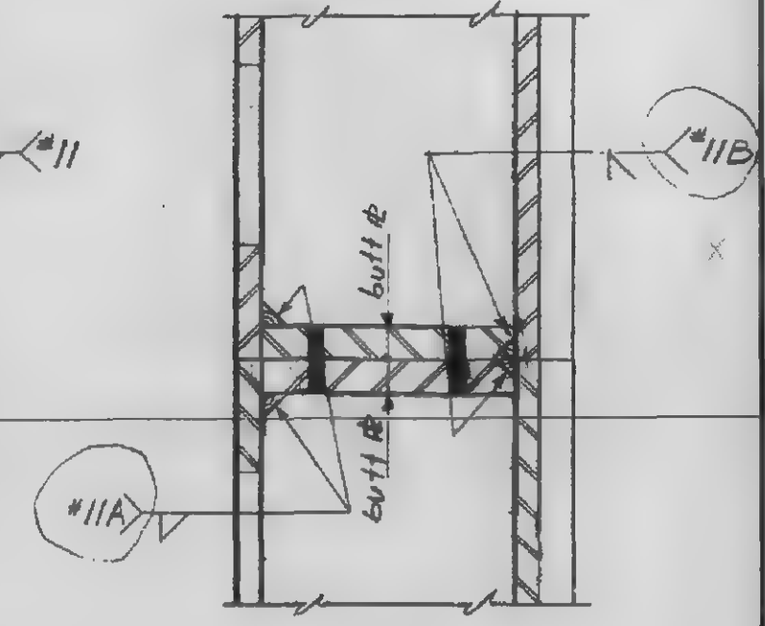

SECTION b-b

① Erector to supply shims of 18 ga. stock where required to maintain full bearing. Shim material to be ASTM A245, Grade D

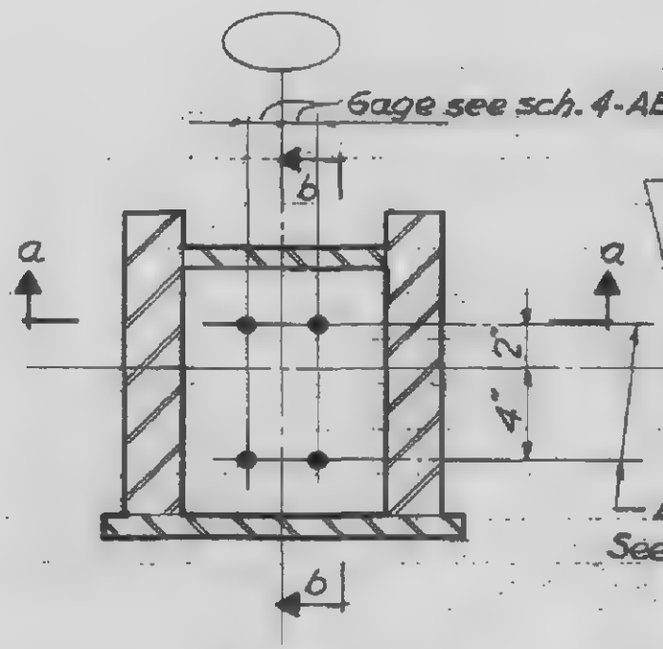

COLUMN SPLICE 411-493

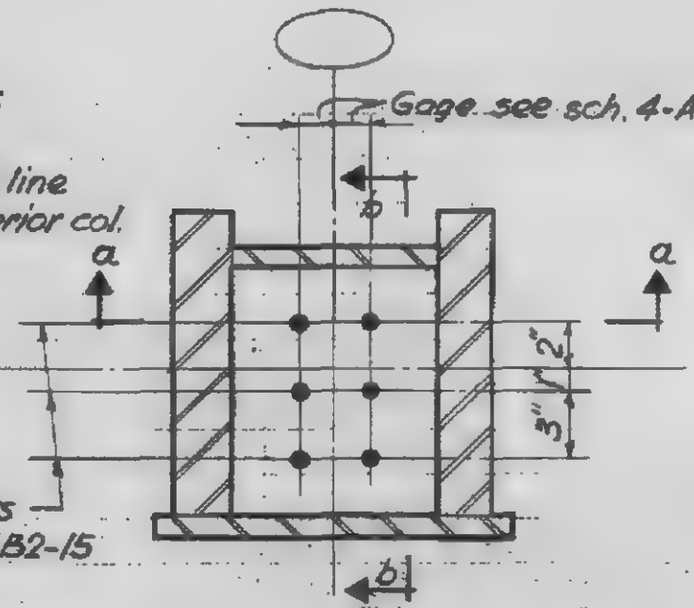

COLUMN SPLICE 681-693

NOTE: For butt ℔ 4 weld #11 see 4-AB2-15

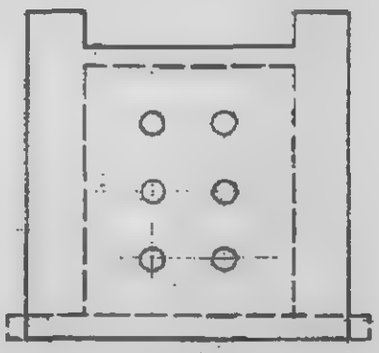

PLAN OF SHIM

Holes ¼" larger than scheduled bolts

4-AB2-12

LICENSED PROFESSIONAL ENGINEER — LESLIE E. ROBERTSON — No. 34360 — UNIVERSITY OF THE STATE OF NEW YORK

PROJECT THE WORLD TRADE CENTER | TITLE EXTERIOR WALL - COLUMN SPLICE TOP-113 | SHEET 6-5

REVISIONS
7-10-67
11-7-67
3-11-68

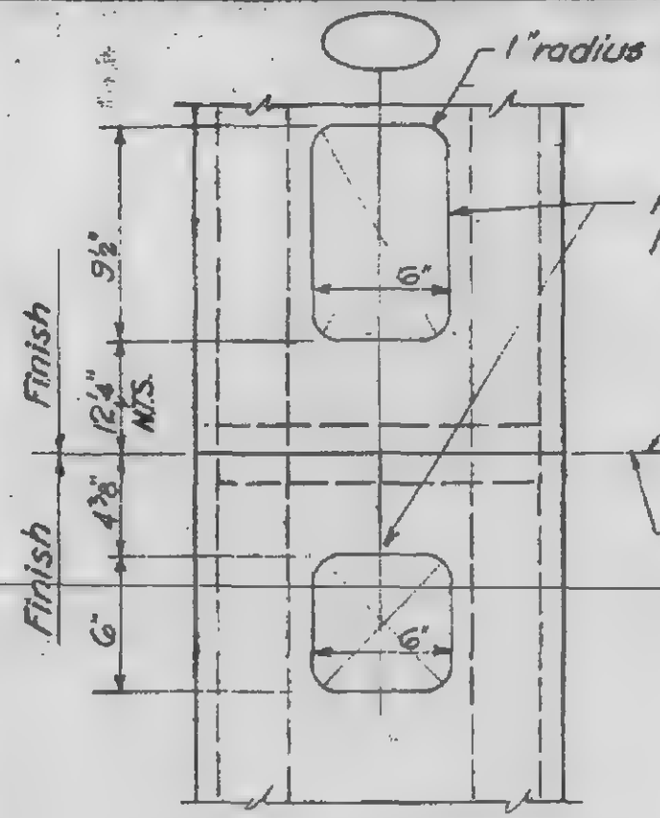

EXTERIOR ELEVATION

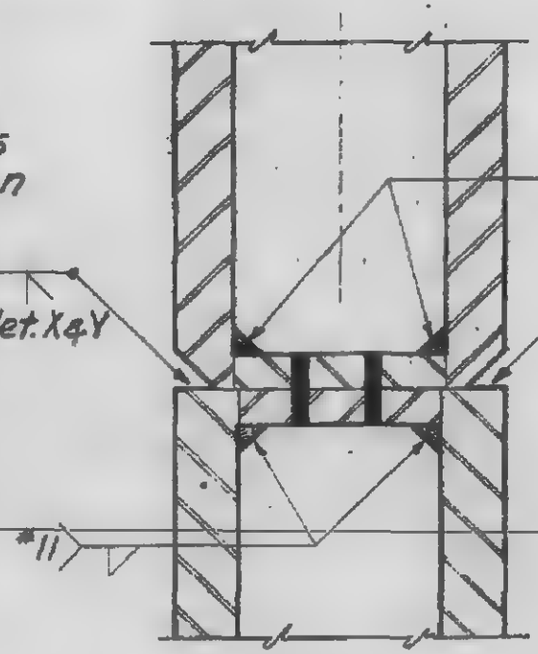

SECTION a-a

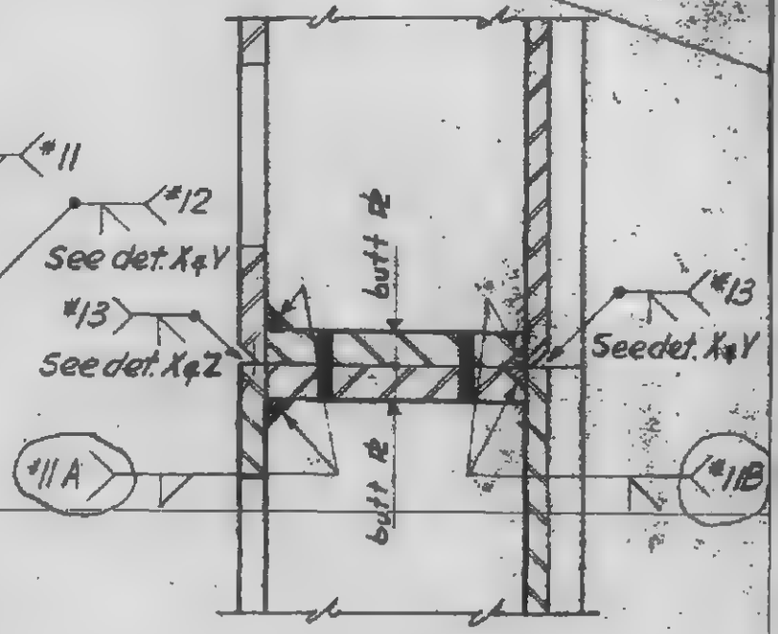

SECTION b-b

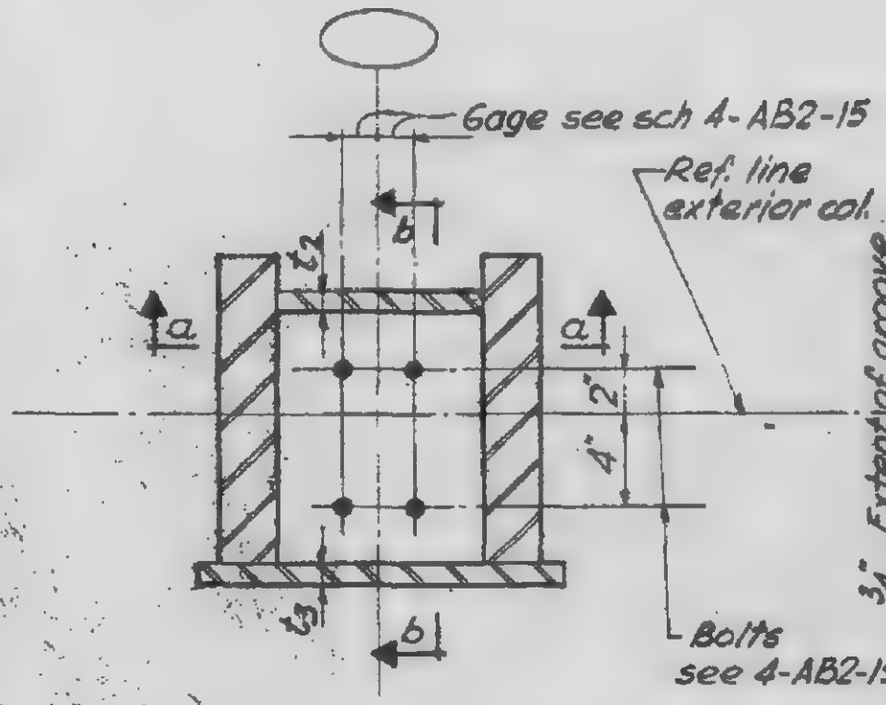

PLAN BELOW SPLICE

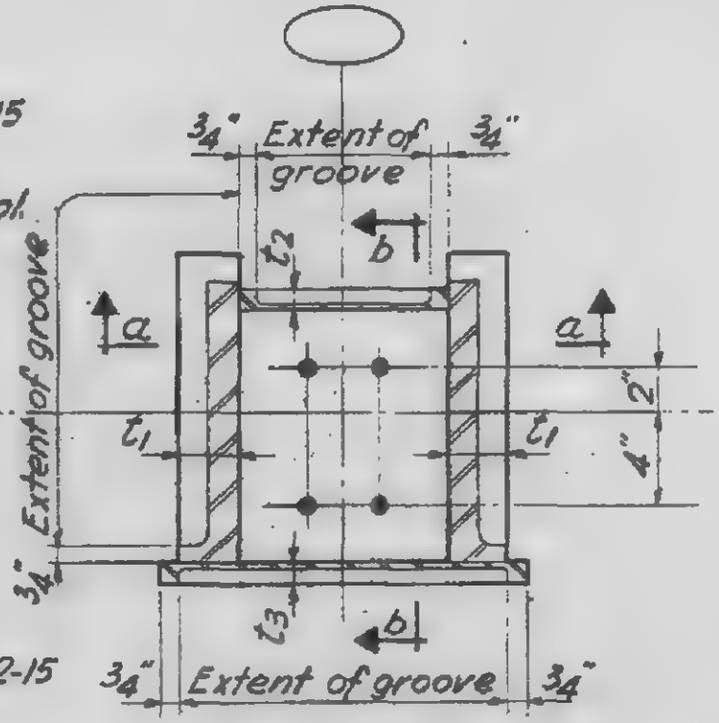

PLAN ABOVE SPLICE

(1) Erector to supply shims of 18 ga. stock where required to maintain full bearing. Shim material to be ASTM A245, Grade D. For plan of shim see 4-AB2-12

For details X, Y, & Z, see 4-AB2-16
For welds "11, "12 & "13, see 4-AB2-15
For butt ℞ see sch, 4-AB2-15

LICENSED PROFESSIONAL ENGINEER LESLIE E. ROBERTSON No. 34360 STATE OF NEW YORK

4-AB2-13

WORTHINGTON, SKILLING, HELLE & JACKSON — Civil & Structural Engineers

PROJECT THE WORLD TRADE CENTER | TITLE EXTERIOR WALL COLUMN SPLICE ~~121-123~~ | DATE ~~6-5-67~~

REVISIONS

7-28-67
3-11-68

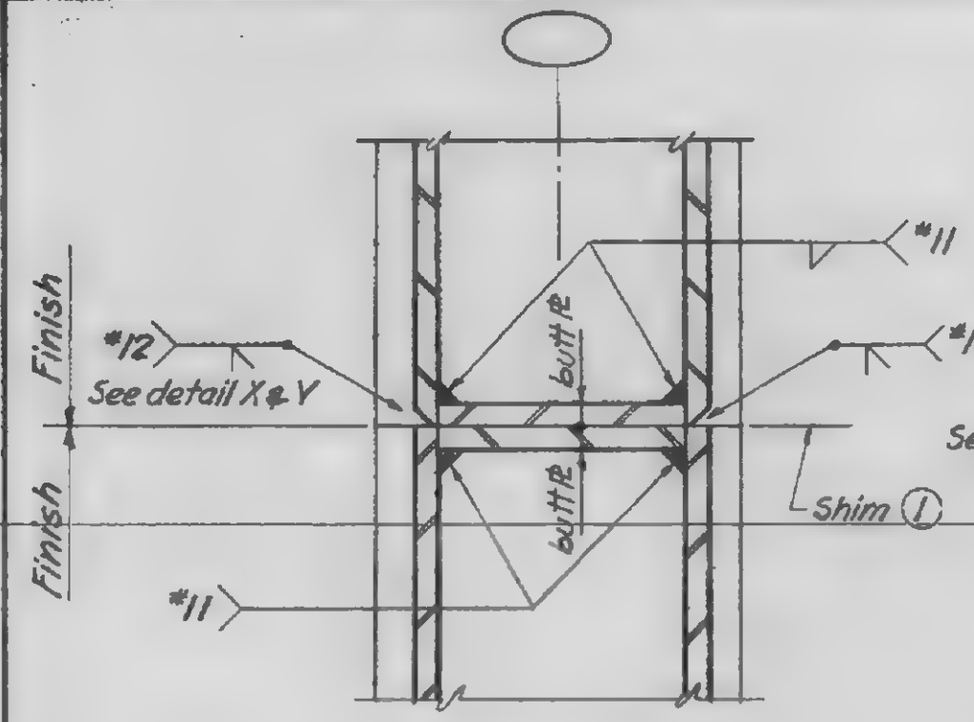

SECTION a-a

SECTION b-b

(1) Erector to supply shims of 18 ga. stock where required to maintain full bearing. Shim material to be ASTM A 245, Grade D

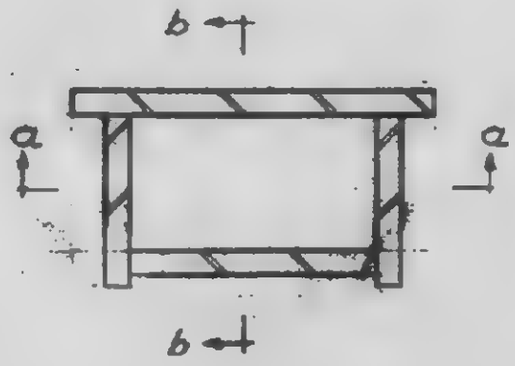

PLAN BELOW SPLICE

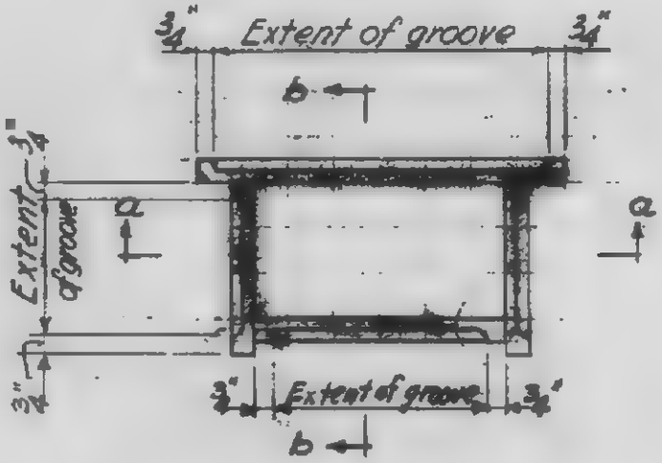

PLAN ABOVE SPLICE

PLAN OF SHIM

For details X, Y & Z see 4-AB2-16
For welds *11 *12 & *13 see 4-AB2-15
For butt ℓ see 4-AB2-15

LICENSED PROFESSIONAL ENGINEER
LESLIE E. ROBERTSON
No. 34260
UNIVERSITY OF THE STATE OF NEW YORK

4-AB2-14

SKILLING, HELLE, CHRISTIANSEN, ROBERTSON — Structural & Civil Engineers

PROJECT: WORLD TRADE CENTER | TITLE: EXTERIOR WALL - COLUMN SPLICE SCHEDULE | DATE: 6- 5-67

REVISIONS
5-14-69

SPLICE DETAIL	BUTT PLATE FY 50	FILLET WELD NO 11	BOLTS NO	BOLTS DIA	BOLTS GRADE	BOLTS GAGE	FIELD WELDS NO 12	FIELD WELDS NO 13	FILLET WELD 11 A	GROOVE WELD 11 B
101	1-3/8	5/16	4	7/8	A 325	3-1/2	3/4	3/8	5/16	5/16
102	1-3/8	5/16	4	7/8	A 325	2-1/2	1	1/2	5/16	5/16
103	1-3/8	5/16	4	7/8	A 325	1-1/2	1-1/2	3/4	5/16	5/16
111	2-3/8	11/16	4	1-1/8	A 490	3-1/2	3/4	3/8	1/2	1/2
112	2-3/8	11/16	4	1-1/8	A 490	2-1/2	1	1/2	9/16	1/2
113	2-3/8	11/16	4	1-1/8	A 490	1-1/2	1-1/2	3/4	3/4	9/16
121	1-3/8	5/16	-	-	-	-	3/4	3/8	5/16	5/16
122	1-3/8	5/16	-	-	-	-	1	1/2	5/16	5/16
123	1-3/8	5/16	-	-	-	-	1-1/2	3/4	5/16	5/16
411	1-3/8	5/16	4	7/8	A 325	3-1/2	-	-	5/16	5/16
412	1-3/8	5/16	4	7/8	A 325	2-1/2	-	-	5/16	5/16
413	1-3/8	5/16	4	7/8	A 325	1-1/2	-	-	5/16	5/16
414	1-5/8	3/8	4	7/8	A 325	3-1/2	-	-	3/8	3/8
421	1-5/8	3/8	4	7/8	A 325	3-1/2	-	-	3/8	3/8
422	1-5/8	3/8	4	7/8	A 325	2-1/2	-	-	3/8	3/8
423	1-5/8	3/8	4	7/8	A 325	1-1/2	-	-	3/8	3/8
424	1-7/8	7/16	4	7/8	A 325	3-1/2	-	-	3/8	7/16
431	1-7/8	7/16	4	1	A 325	3-1/2	-	-	3/8	7/16
432	1-7/8	7/16	4	1	A 325	2-1/2	-	-	3/8	7/16
433	1-7/8	7/16	4	1	A 325	1-1/2	-	-	7/16	7/16
434	2-1/8	1/2	4	1	A 325	3-1/2	-	-	3/8	7/16
441	2-1/8	1/2	4	1-1/8	A 325	3-1/2	-	-	3/8	7/16
442	2-1/8	1/2	4	1-1/8	A 325	2-1/2	-	-	7/16	7/16
443	2-1/8	1/2	4	1-1/8	A 325	1-1/2	-	-	9/16	1/2
444	2-3/8	11/16	4	1-1/8	A 325	3-1/2	-	-	1/2	1/2
445	2-3/8	11/16	4	1-1/8	A 325	2-1/2	-	-	9/16	1/2
491	2-3/8	11/16	4	1-1/8	A 490	3-1/2	-	-	1/2	1/2
492	2-3/8	11/16	4	1-1/8	A 490	2-1/2	-	-	9/16	1/2
493	2-3/8	11/16	4	1-1/8	A 490	1-1/2	-	-	3/4	9/16
494	2-5/8	13/16	4	1-1/8	A 490	3-1/2	-	-	1/2	9/16
495	2-5/8	13/16	4	1-1/8	A 490	2-1/2	-	-	11/16	9/16
681	2-5/8	13/16	6	1	A 490	3-1/2	-	-	1/2	9/16
682	2-5/8	13/16	6	1	A 490	2-1/2	-	-	11/16	9/16
683	2-5/8	13/16	6	1	A 490	1-1/2	-	-	7/8	9/16
685	3	1	6	1	A 490	2-1/2	-	-	13/16	5/8
691	3	1	6	1-1/8	A 490	3-1/2	-	-	5/8	5/8
692	3	1	6	1-1/8	A 490	2-1/2	-	-	13/16	5/8
693	3	1	6	1-1/8	A 490	1-1/2	-	-	1- 1/8	11/16

NOTE- BUTT PLATE THICKNESS IS NET AFTER FINISHING
OPEN HOLES 1/4 INCH LARGER THAN BOLT DIAMETER

LICENSED PROFESSIONAL ENGINEER — LESLIE E. ROBERTSON — No. 34360 — UNIVERSITY OF THE STATE OF NEW YORK

SKILLING - HELLE - CHRISTIANSEN - ROBERTSON Structural & Civil Engineers

PROJECT THE WORLD TRADE CENTER | TITLE EXTERIOR WALL - COLUMN SPLICE DETAILS | DATE 6-5-67

REVISIONS

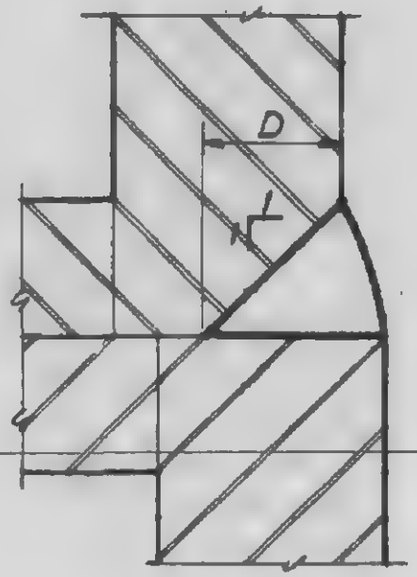

Case 1

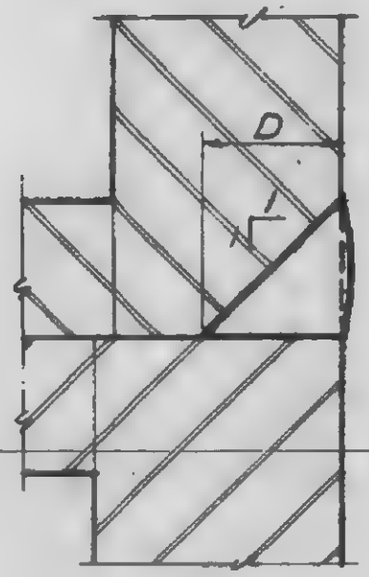

Case 2

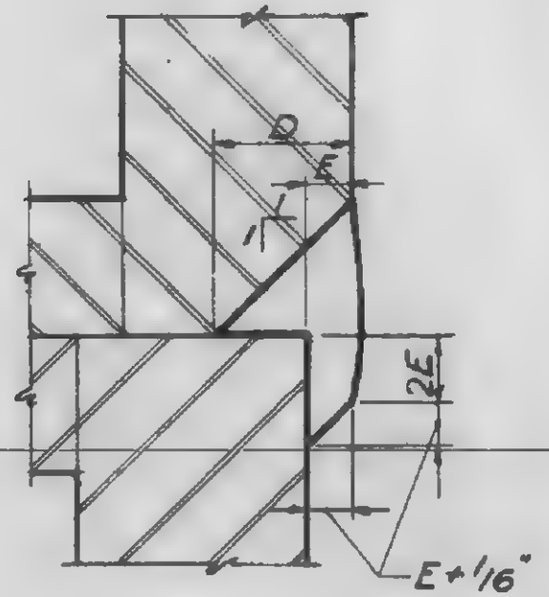

Case 3

D = Scheduled weld size for weld #12 or #13

DETAIL X

Showing field welding of welds #12 & #13

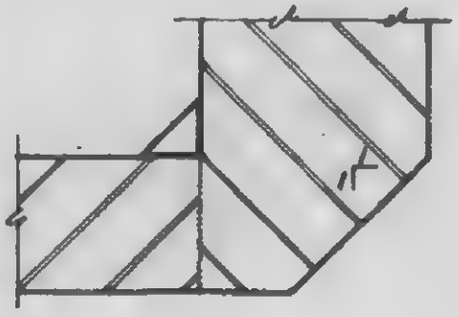

T1 or T2 > weld #12 or #13

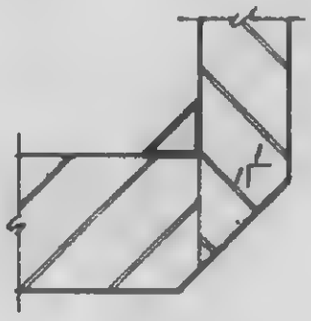

T1 or T2 < weld #12 or #13

DETAIL Y

Showing edge preparation for weld #12 & #13

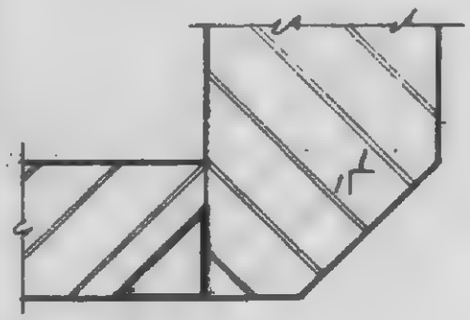

T3 > weld #13

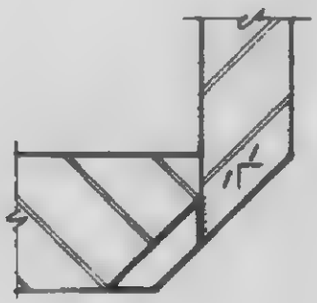

T3 < weld #13

DETAIL Z

Showing edge preparation for weld #13

4-AB2-16

LESLIE E. ROBERTSON LICENSED PROFESSIONAL ENGINEER No. 34560 STATE OF NEW YORK

WORTHINGTON, SKILLING, HELLE & JACKSON — Civil & Structural Engineers

PROJECT: THE WORLD TRADE CENTER | TITLE: EXTERIOR WALL — WELDING ELECTRODES | DATE: 6-5-67

REVISIONS

FY GREATER THAN	FY EQUAL OR LESS THAN	ELECTRODE 1 (FY REF PL 1) ASTM SPEC	CLASS	SUBMERGED ARC WELDING	ELECTRODE 2 (FY REF PL 1) ASTM SPEC	CLASS	SUBMERGED ARC WELDING	ELECTRODE FOR WELD 10 (FY REF PL 3) ASTM SPEC	CLASS	SUBMERGED ARC WELDING
	36	A233	E 70XX	GRADE SAW-2	A233	E 70XX	GRADE SAW-1	A233	E 70XX	GRADE SAW-1
36	42	A233	E 70XX	GRADE SAW-2	A233	E 70XX	GRADE SAW-1	A233	E 70XX	GRADE SAW-1
42	50	A233	E 70XX	GRADE SAW-2	A233	E 70XX	GRADE SAW-1	A233	E 70XX	GRADE SAW-2
50	55	A233	E 70XX	NOTE 1	A233	E 70XX	NOTE 1	A233	E 70XX	NOTE 1
55	60	A316	E 80XX	NOTE 1	A233	E 70XX	NOTE 1	A233	E 70XX	NOTE 1
60	65	A316	E 80XX	NOTE 1	A233	E 70XX	NOTE 1	A316	E 80XX	NOTE 1
65	70	A316	E 80XX	NOTE 1	A233	E 70XX	NOTE 1	A316	E 80XX	NOTE 1
70	80	A316	E 90XX	NOTE 1	A316	E 80XX	NOTE 1	A316	E 90XX	NOTE 1
80	90	A316	E100XX	NOTE 1	A316	E 90XX	NOTE 1	A316	E100XX	NOTE 1
90	100	A316	E110XX	NOTE 1	A316	E100XX	NOTE 1	A316	E110XX	NOTE 1

NOTES 1 SUBMERGED ARC WELDING SHALL CONFORM TO THE SPECIFICATIONS
2 LOW HYDROGEN ELECTRODES SHALL BE USED FOR ALL MANUAL ARC WELDING

LICENSED PROFESSIONAL ENGINEER LESLIE E. ROBERTSON No. 24360 STATE OF NEW YORK

4-AB2- 17

WORTHINGTON, SKILLING, HELLE & JACKSON — Civil & Structural Engineers

PROJECT: THE WORLD TRADE CENTER | TITLE: EXTERIOR WALL - DETAIL 2 | DATE: 6-5-67

REVISIONS
11-7-67

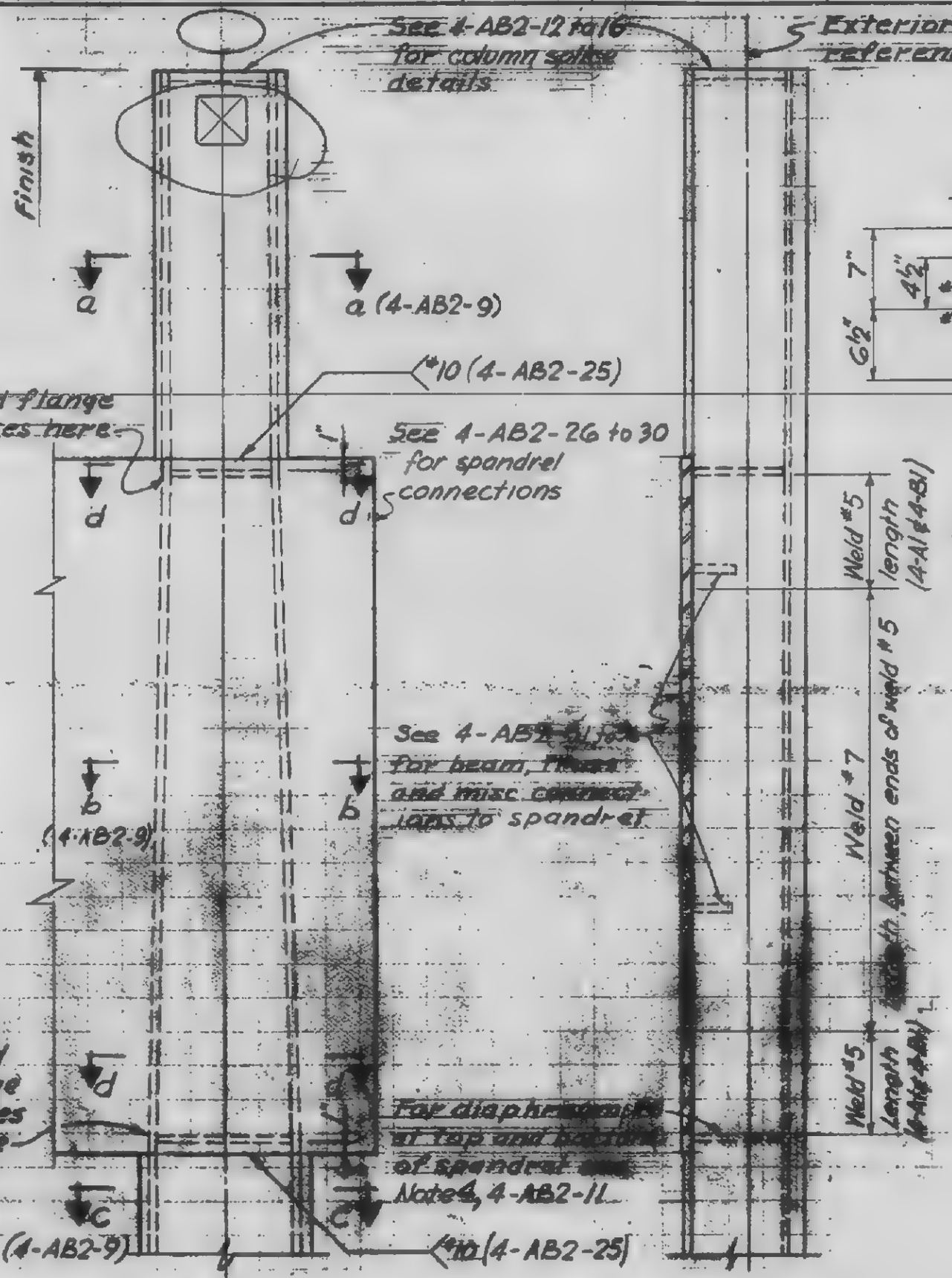

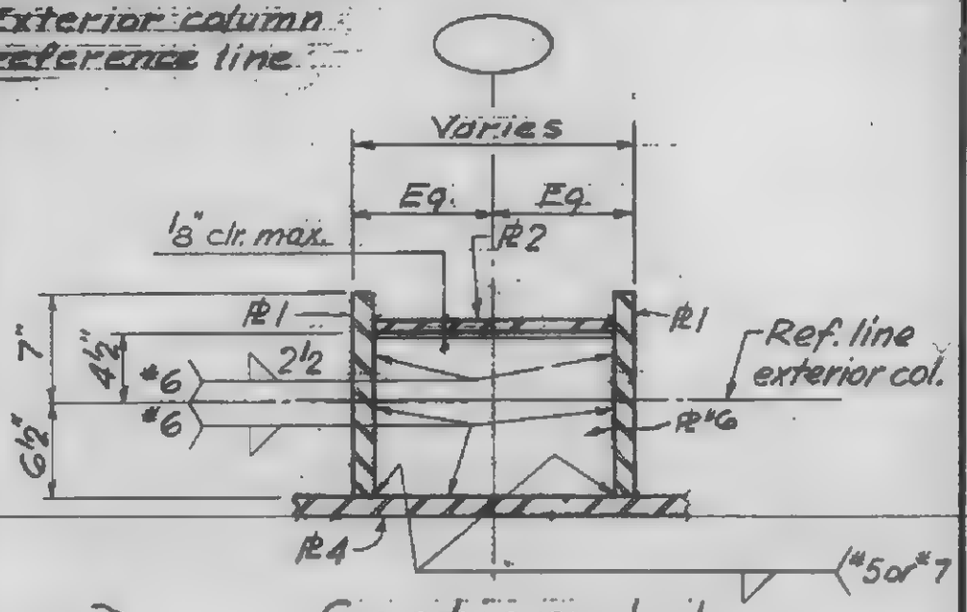

Section d-d

NOTES:
1. See 4-AB2-9 for #s 1, 2 and 3
2. See 4-A1 & 4-B1 for #4 and welds #5, #6 & #7
3. Electrodes for welds #5, #6 & #7 shall be Electrode 1. See 4-AB2-17

NOTE: Weld #5 & #7 required only where shown in 4-A1 & 4-B1

4-AB2-18

WORTHINGTON, SKILLING, HELLE & JACKSON — Civil & Structural Engineers

PROJECT THE WORLD TRADE CENTER | TITLE EXTERIOR WALL-DETAIL 3 | DATE 6-5-67

REVISIONS
7-18-69
3-16-70

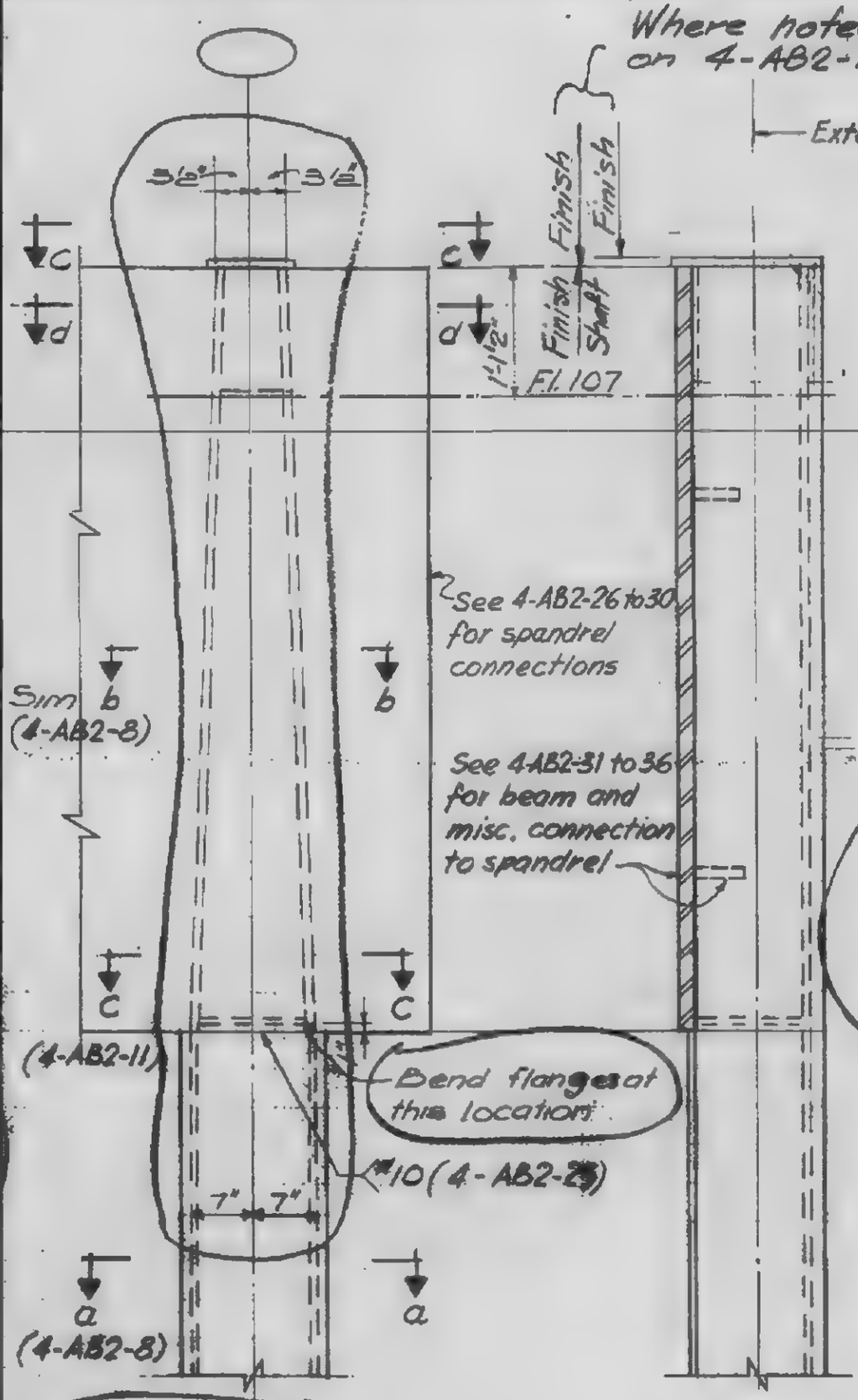

Elevation typical

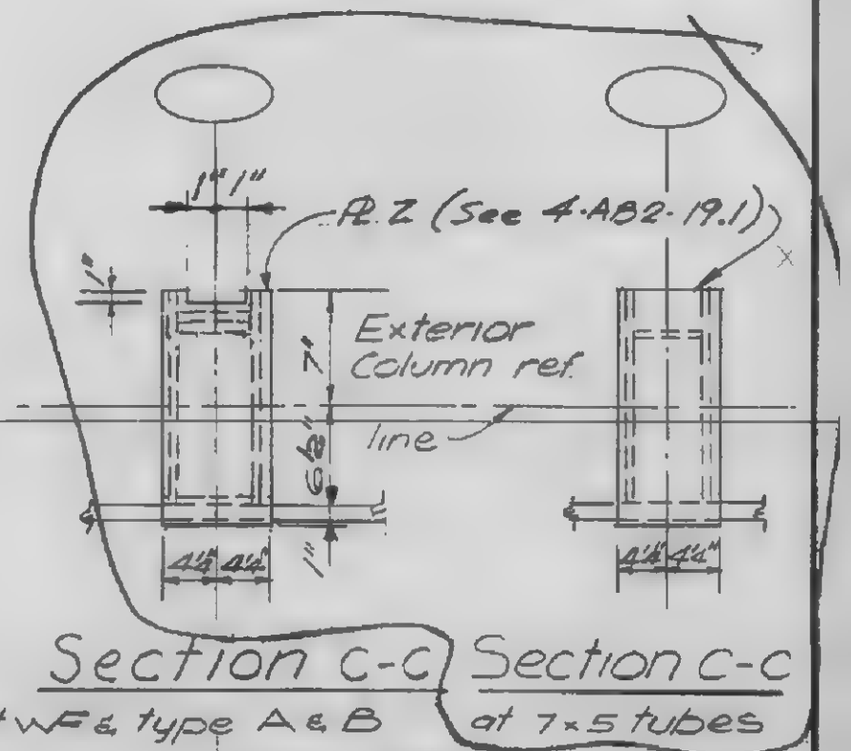

Section c-c at WF & type A & B

Section c-c at 7×5 tubes

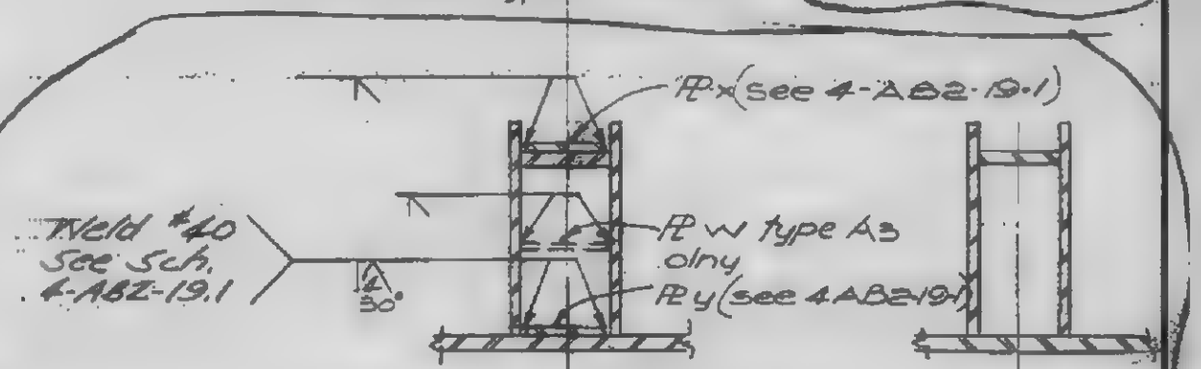

Section d-d at wf & type A & B

Section d-d at 7×5 tubes

(COLUMN TYPE 120)

4-AB2-19

SKILLING, HELLE, CHRISTIANSEN, ROBERTSON — Structural & Civil Engineers

PROJECT: THE WORLD TRADE CENTER | TITLE: EXTERIOR WALL - DETAIL 3 | DATE: 8-15-69

REVISIONS: 3-16-70

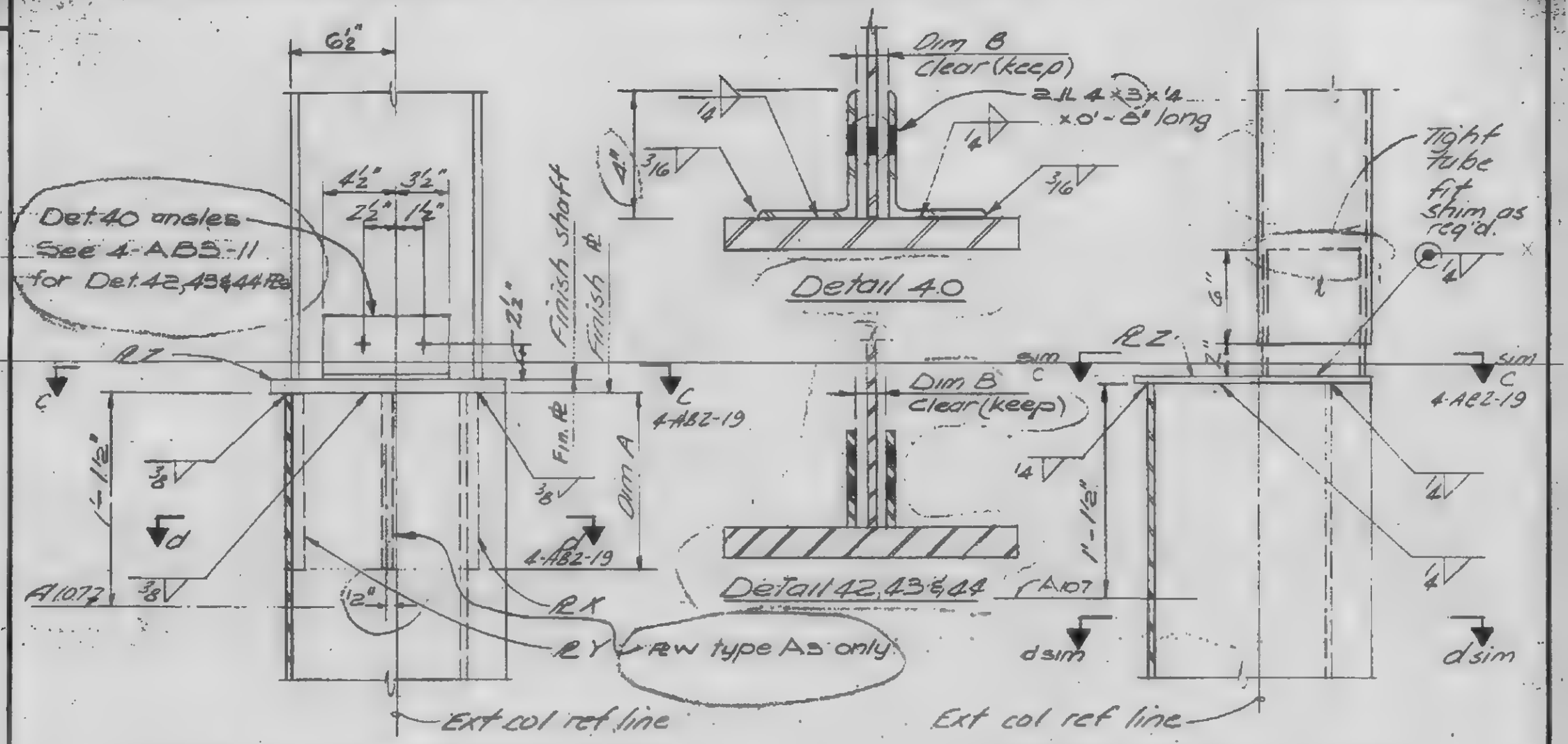

Detail at WF & Type A & B

Detail at 7 x 5 Tube

See 4-A3-2 & 4-B3-2 for location of columns							
Col. type	PL X	PL Y	PL Z*	Dim A	Dim B	Weld #40	PL W
7x5 tube	—	—	¼"	—	—	—	—
12WF40-50	¾"	¾"	1"	1'-0"	½"	¾	—
Type A1 & A4	¾"	1"	1"	1'-6"	⅝"	¾	—
Type A2	¾"	1½"	1½"	1'-6"	⅞"	⅞	—
Type A3	¾"	2"	1½"	2'-0"	4"	1	1"
Type B1	¾"	1"	1"	1'-6"	⅝"	¾	—
Type B2 & B3	¾"	1½"	1½"	1'-6"	⅞"	⅞	—

* Finished thickness

Notes:

1. Plates X, Y & Z shall be Fy = 42 ksi.
2. Welding shall be accomplished using E70XX low hydrogen electrodes.
3. See 4-A3-2 & 4-B3-2 for location of columns.
4. See 4-AB3-11 for Details 40, 42, 43 & 44.

4-AB2-19.1

WORTHINGTON, SKILLING, HELLE & JACKSON — Civil & Structural Engineers

PROJECT THE WORLD TRADE CENTER | TITLE EXTERIOR WALL - DETAIL 4 & 5 | DATE 6-5-67

REVISIONS

7-28-67

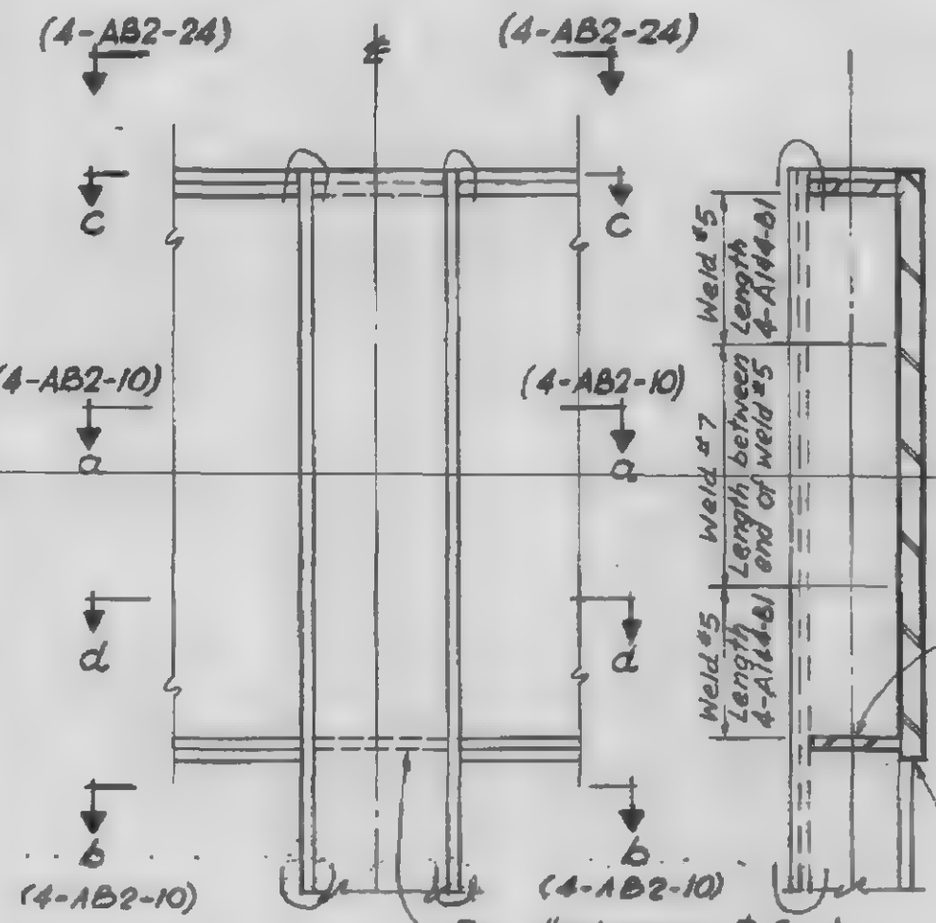

ELEVATION

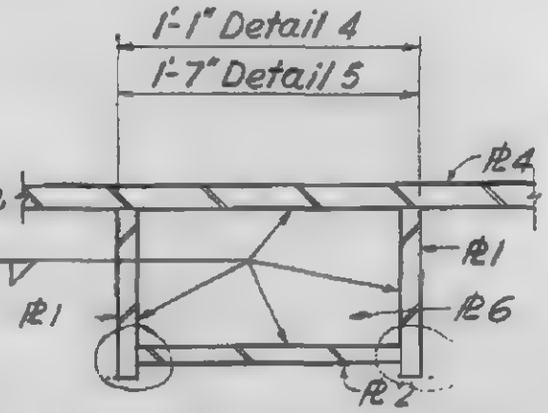

See 4-AB2-31 to 36 for beam, truss and misc. connect.

NOTE: Welds #5 & #7 required only where shown in 4-A1 and 4-B1

SECTION c-c

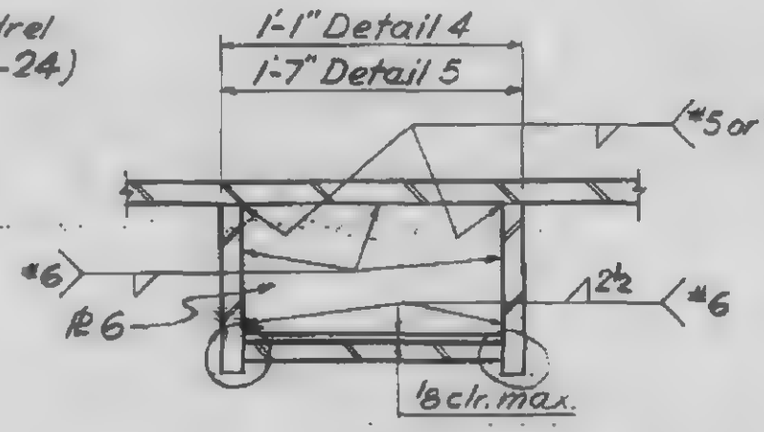

SECTION d-d

SECTION X-X

NOTES
1. Detail 4 applies to columns of type 500
   Detail 5 applies to columns of type 400
2. See 4-AB2-10 for ℞s 1, 2 & 3 and welds #1, #2 & #3.
3. See 4-A1 & 4-B1 for welds #5, #6 & #7, and ℞4
4. Electrodes for welds #5, #6 & #7 shall be Electrodes 1. See 4-AB2-17

LICENSED PROFESSIONAL ENGINEER LESLIE E. ROBERTSON No. 34360 UNIVERSITY OF THE STATE OF NEW YORK

4-AB2-21

WORTHINGTON, SKILLING, HELLE & JACKSON — Civil & Structural Engineers

PROJECT: THE WORLD TRADE CENTER | TITLE: EXTERIOR WALL - DETAIL 6 | DATE: 6-5-67

REVISIONS

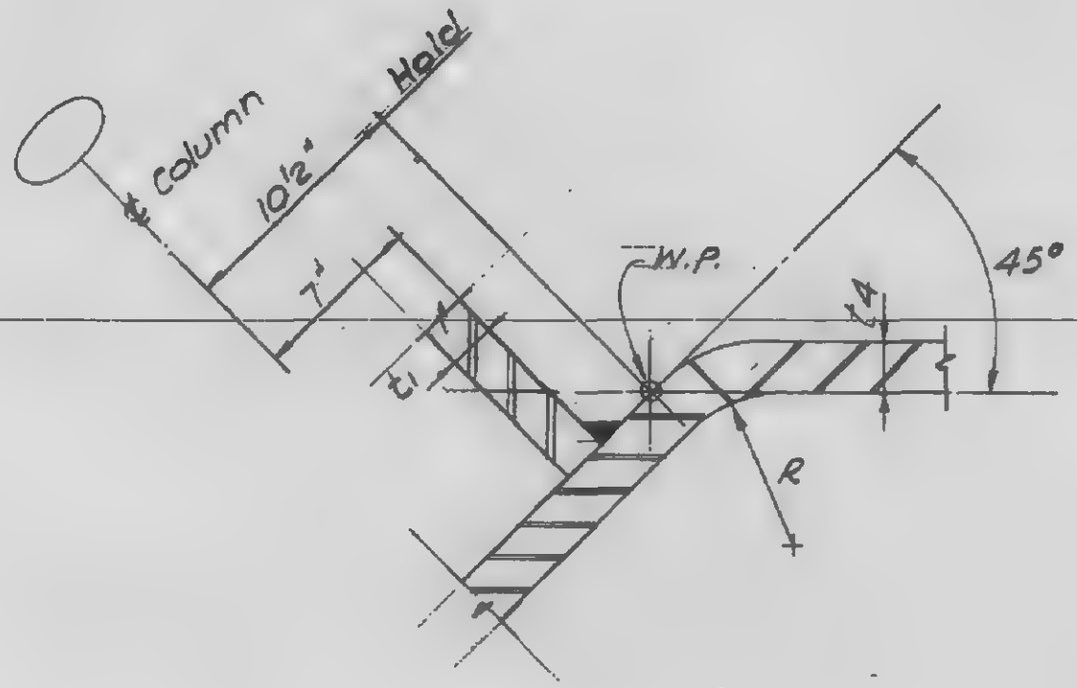

YIELD POINT OF SPANDREL	t4	R
36 Ksi	3/8 - 1/2	t4 x 1½
	9/16 - 1	t4 x 2
	1 1/16 - 2	t4 x 2½
42 - 50 Ksi	3/8 - 1/2	t4 x 3
	9/16 - 1	t4 x 5
	1 1/16 - 2	t4 x 5
55 - 60 Ksi	3/8 - 1/2	t4 x 3½
	9/16 - 1	t4 x 5
	1 1/16 - 2	t4 x 5
65 - 100 Ksi	3/8 - 1/2	t4 x 5
	9/16 - 1	t4 x 5
	1 1/16 - 2	t4 x 5

LESLIE E. ROBERTSON — No. 3490 — REGISTERED PROFESSIONAL ENGINEER — STATE OF NEW YORK

4 - AB2 - 22

WORTHINGTON, SKILLING, HELLE & JACKSON — Civil & Structural Engineers

PROJECT: THE WORLD TRADE CENTER | TITLE: EXTERIOR WALL – DETAIL 7 | DATE: 6-5-67

REVISIONS

11-7-67

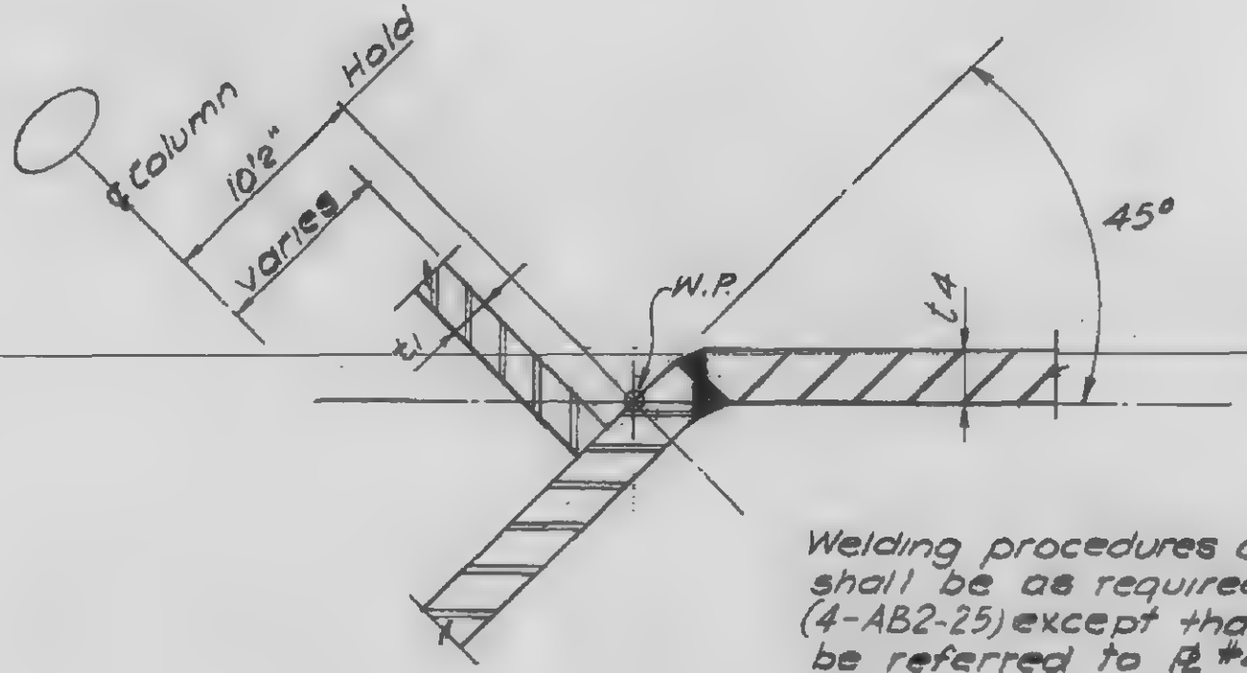

Welding procedures and electrodes shall be as required for Weld #10, (4-AB2-25) except that welds shall be referred to Rf #4 instead of Rf #3.

At fabricators option Detail 7 may be used in place of Detail 6.

LESLIE E. ROBERTSON — No. 34580 — LICENSED PROFESSIONAL ENGINEER — STATE OF NEW YORK

4-AB2-23

WORTHINGTON, SKILLING, HELLE & JACKSON — Civil & Structural Engineers

PROJECT: THE WORLD TRADE CENTER | TITLE: EXTERIOR WALL - DETAIL 8 | DATE: 6-5-67

REVISIONS

7-28-67

WELD SCHEDULE	
t4	#1
1/4 - 5/16	3/16
3/8 - 7/16	3/16
1/2 - 3/4	1/4
13/16 - 1	5/16
Over 1"	5/16

* NOTE: t2 to match thickness and Fy of center column.

Note: See panel schedule for PL thickness t2 & t4

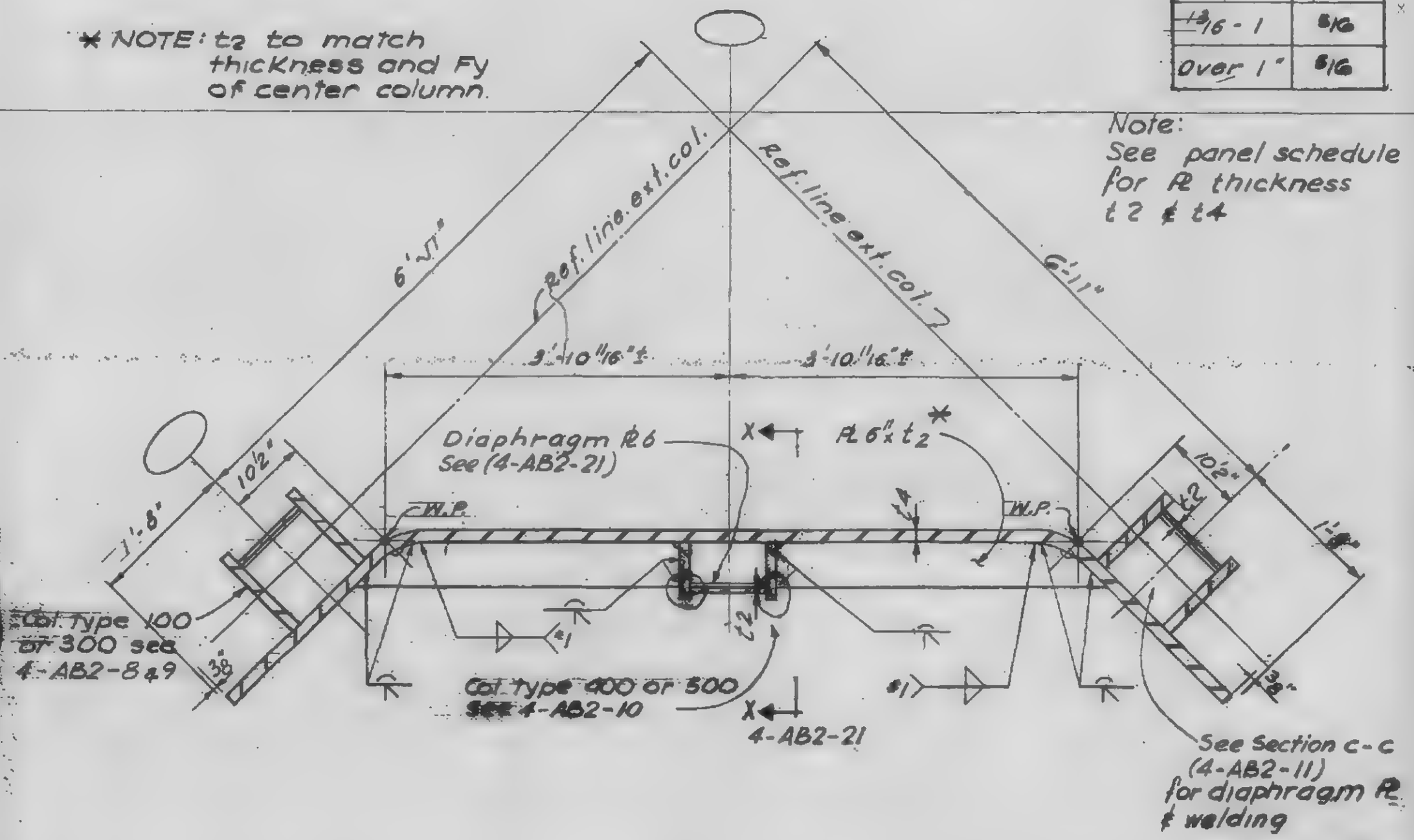

4-AB2-24

WORTHINGTON, SKILLING, HELLE & JACKSON — Civil & Structural Engineers

PROJECT: THE WORLD TRADE CENTER | TITLE: EXTERIOR WALL WELD #10 | DATE: 6-5-67

REVISIONS

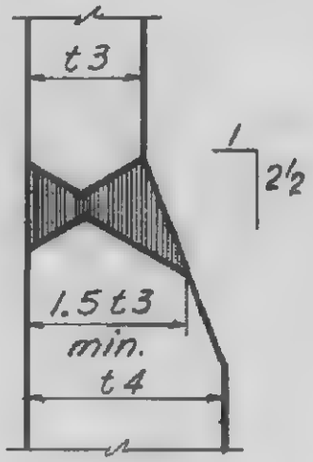

$t4 \geq 1.5\,t3,\ F_y\ \text{PL}\ t3 > F_y\ \text{PL}\ t4$

Case 1

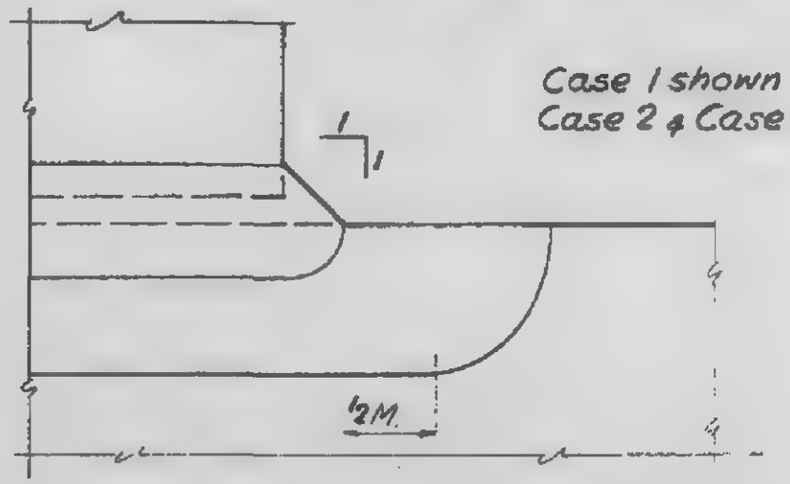

Case 1 shown
Case 2 & Case 3 similar

DETAIL 1

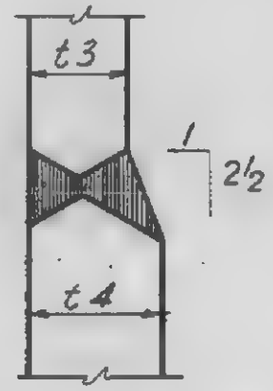

$t4 < 1.5\,t3,\ F_y\ \text{PL}\ t3 > F_y\ \text{PL}\ t4$

Case 2

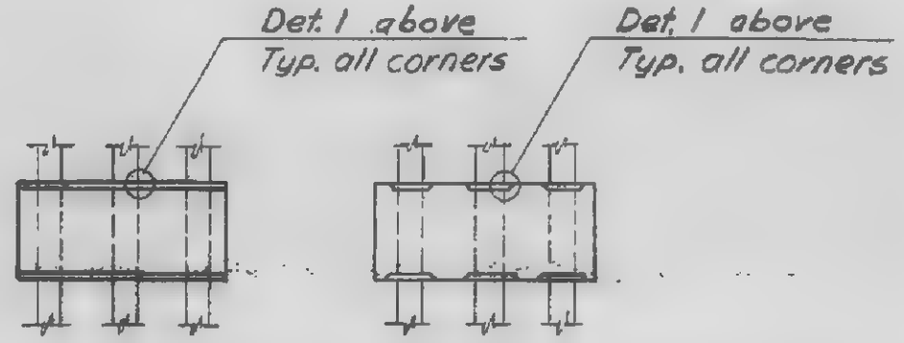

OPTIONAL METHODS OF PREPARING 2½:1 BEVELS ON PL #4. BEVEL REQUIRED FOR Cases 1 & 3

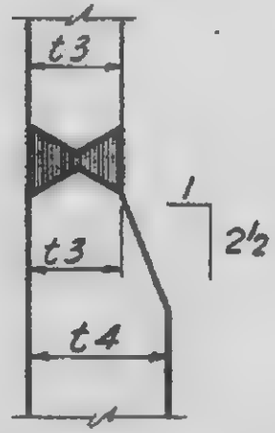

$t4 > t3,\ F_y\ \text{PL}\ t3 = F_y\ \text{PL}\ t4$

Case 3

Welding procedures shall conform to the requirements of AWS D2.3-63 "Specification for Welded Highway and Railway Bridges."
Low hydrogen electrodes shall be used throughout for manual arc welding.
See dwg 4-AB2-17 for welding electrodes.

LICENSED PROFESSIONAL ENGINEER LESLIE E. ROBERTSON No. 32360 CITY OF THE STATE OF NEW YORK

4-AB2-25

WORTHINGTON, SKILLING, HELLE & JACKSON — Civil & Structural Engineers

PROJECT: THE WORLD TRADE CENTER | TITLE: EXTERIOR WALL SPANDREL CONNECTION DETAILS 101-135 | DATE: 6-5-67

REVISIONS

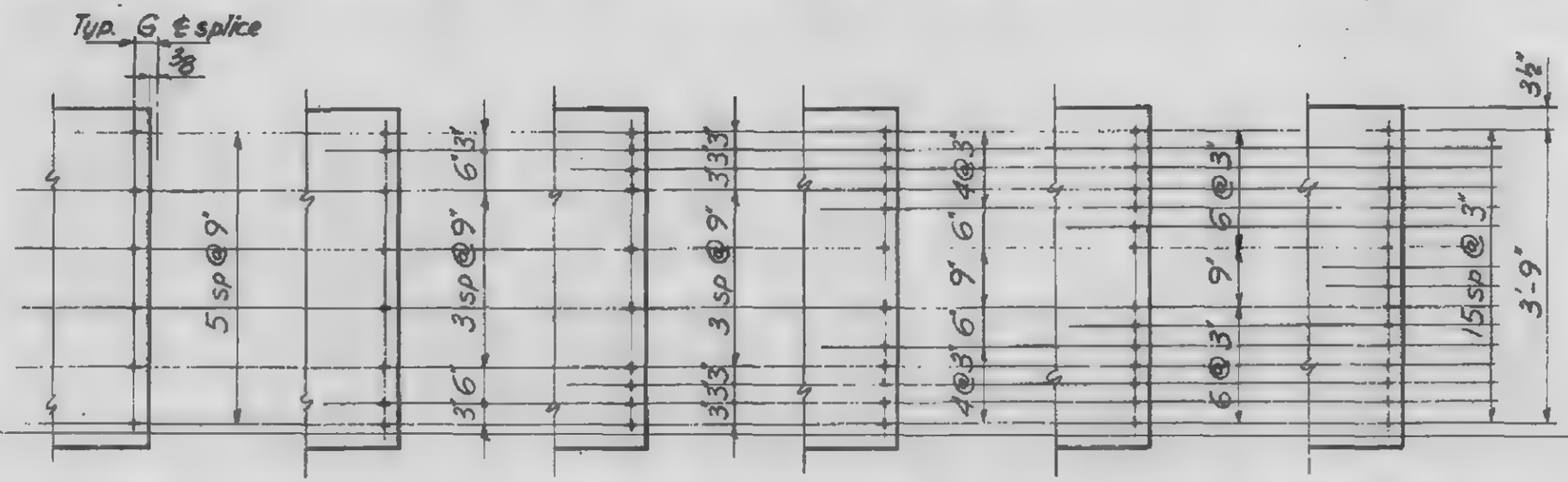

Details 101 & 121 | Details 102 & 122 | Details 103 & 123 | Details 104 & 124 | Details 105 & 125 | Details 106 & 126

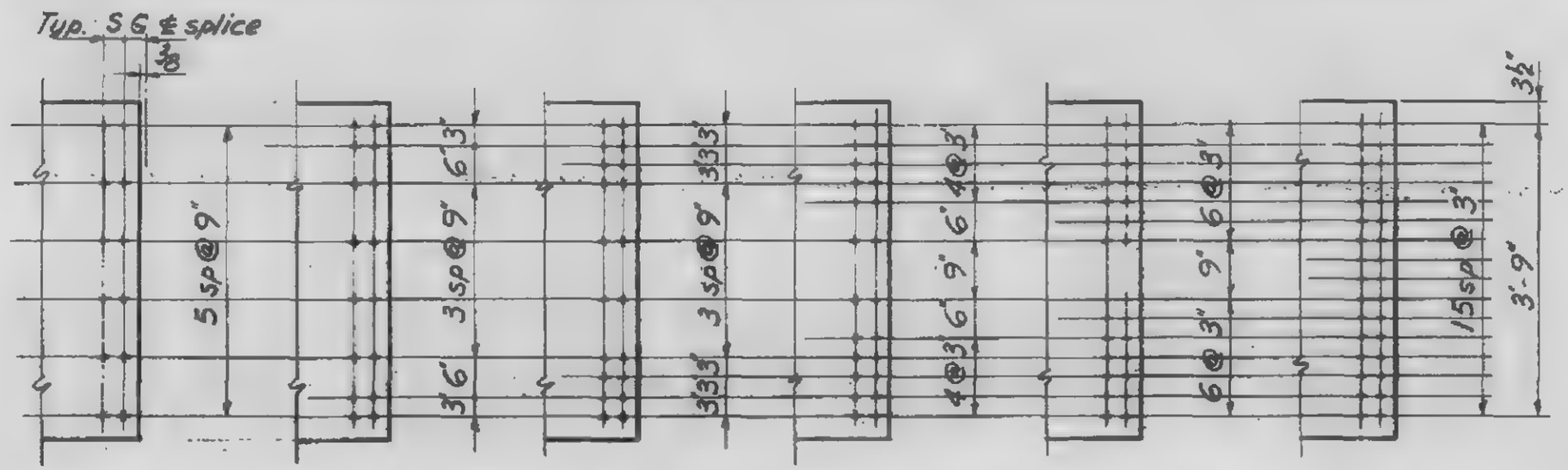

Detail 111 | Details 112 & 131 | Details 113 & 132 | Details 114 & 133 | Detail 134 | Detail 135

NOTES: 1. For splice plate detail see 4-AB2-29
2. For dimension and bolt schedule, see 4-AB2-30
3. Holes in spandrel plate to be ¼" larger than diameter of bolt.

WORTHINGTON, SKILLING, HELLE & JACKSON — Civil & Structural Engineers

PROJECT THE WORLD TRADE CENTER | TITLE EXTERIOR WALL SPANDREL CONNECTION DETAILS 201-302 | DATE 6-5-67

REVISIONS

7-18-69

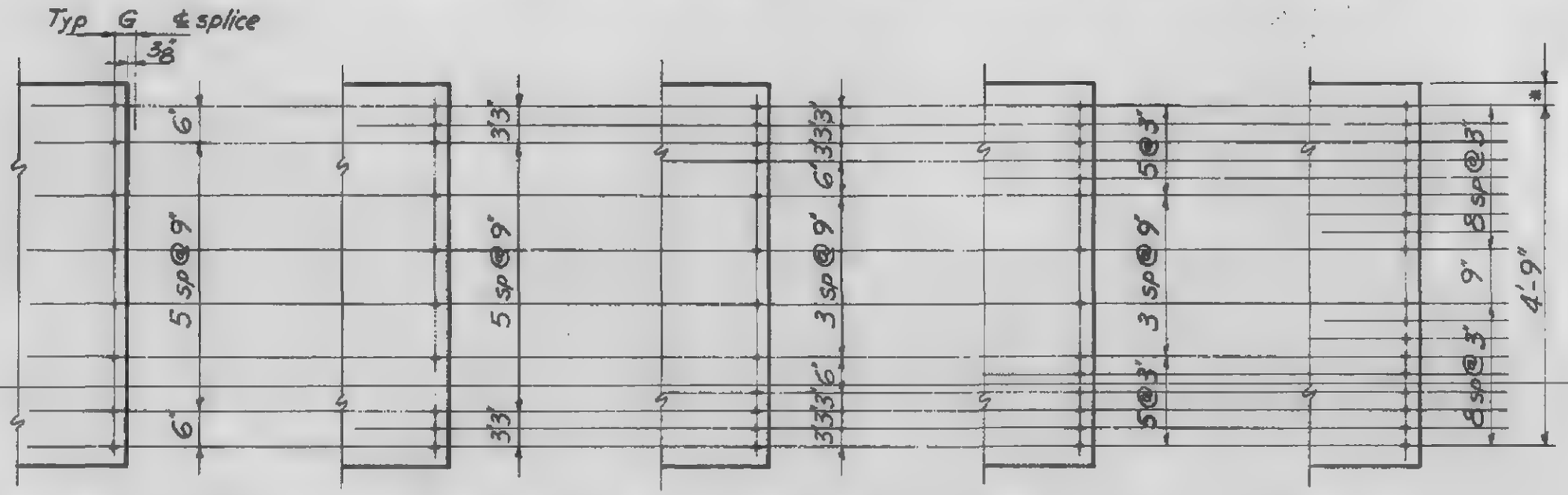

Details 201, 221 & 241 | Details 202, 222 & 242 | Details 203 & 223 | Details 224 | Detail 251

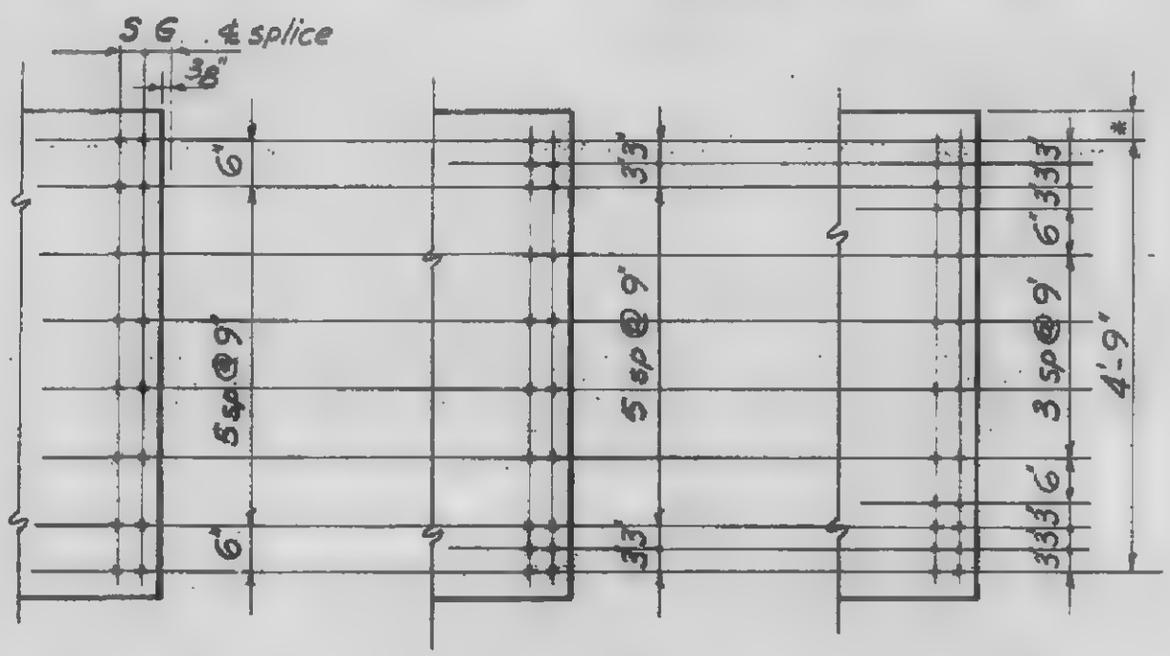

Detail 231 | Details 211 & 232 | Details 212 & 233

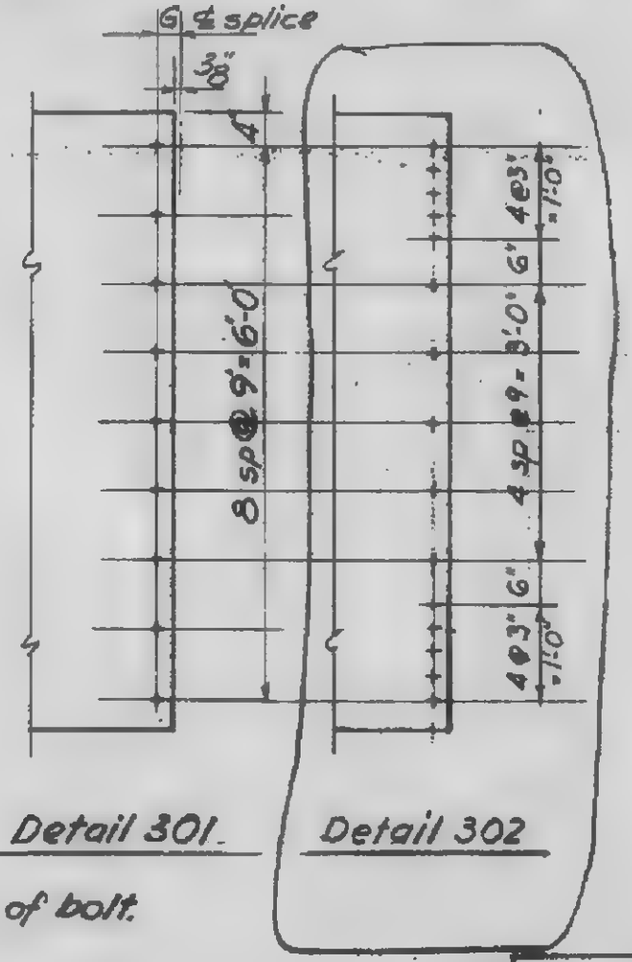

Detail 301 | Detail 302

NOTES: 1. For splice plate detail see 4-AB2-29
2. For dimension and bolt schedule, see 4-AB2-30
3. Holes in spandrel plate to be ¼" larger than diameter of bolt.
4. * = 3½" For detail No. 201-233 (5'-4" spandrel)
= 4½" For detail No. 241-251 (5'-6" spandrel)

4-AB2-27

WORTHINGTON, SKILLING, HELLE & JACKSON — Civil & Structural Engineers

PROJECT: THE WORLD TRADE CENTER | TITLE: EXTERIOR WALL SPANDREL CONNECTION DETAILS 401-416 | DATE: 6-5-67

REVISIONS

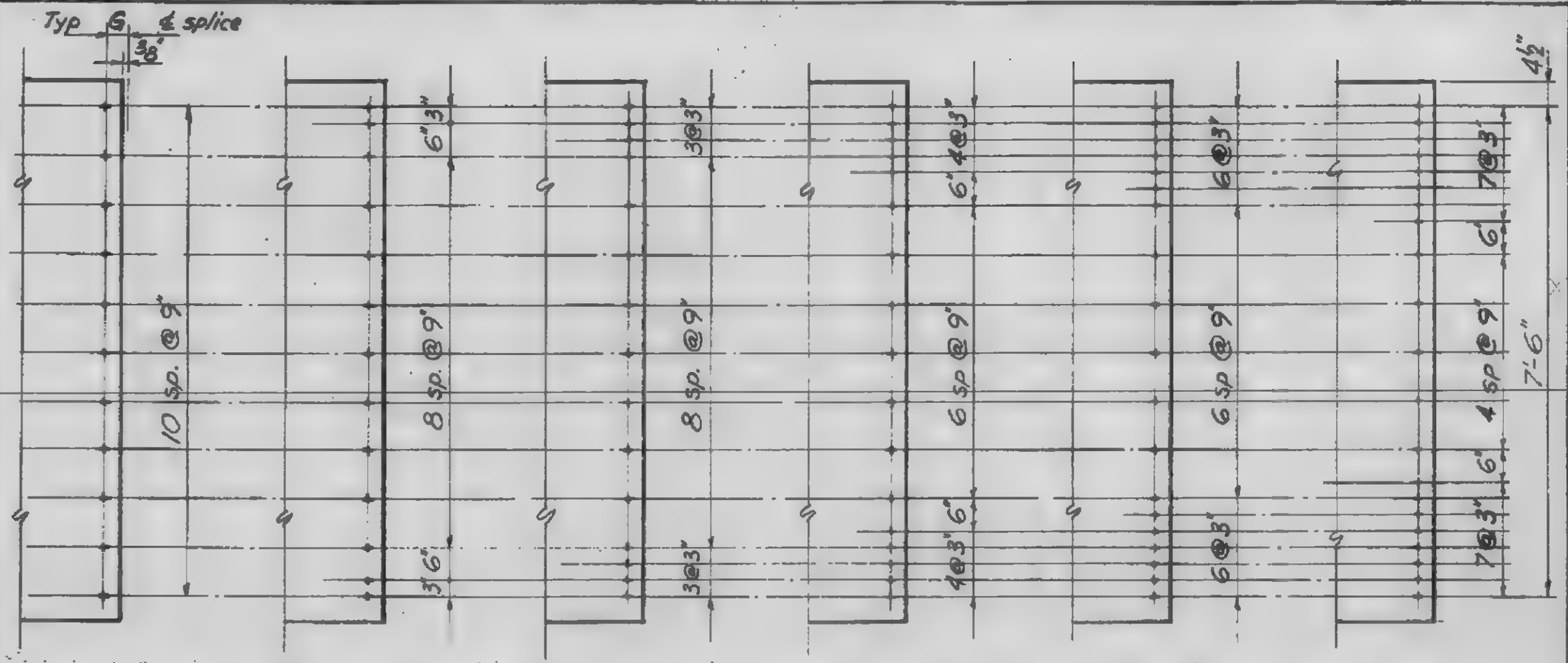

Details 401 & 411 | Details 402 & 412 | Details 403 & 413 | Details 404 & 414 | Details 405 & 415 | Detail 416

NOTES: 1. For splice plate detail see 4-AB2-29
2. For dimension and bolt schedule see 4-AB2-30
3. Holes in spandrel plate to be ¼" larger than diameter of bolt.

4-AB2-28

WORTHINGTON, SKILLING, HELLE & JACKSON — Civil & Structural Engineers

PROJECT THE WORLD TRADE CENTER | TITLE EXTERIOR WALL SPANDREL CONNECTION SPLICE PLATE | DATE 6-5-67

REVISIONS

3-11-68

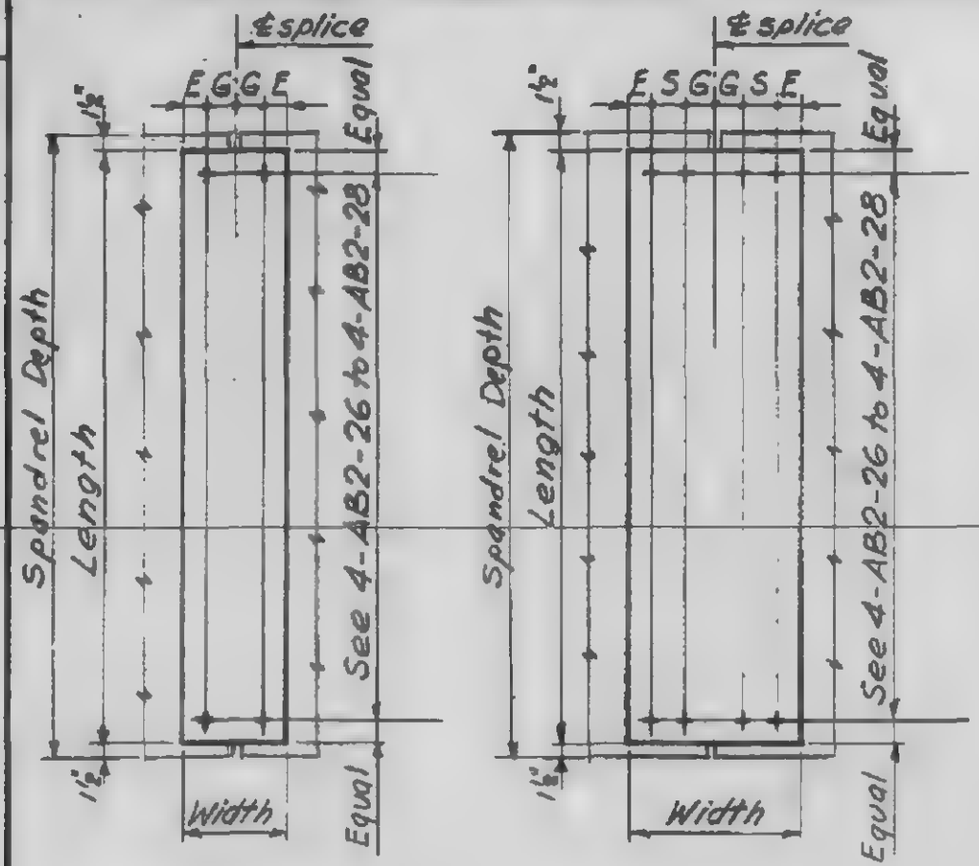

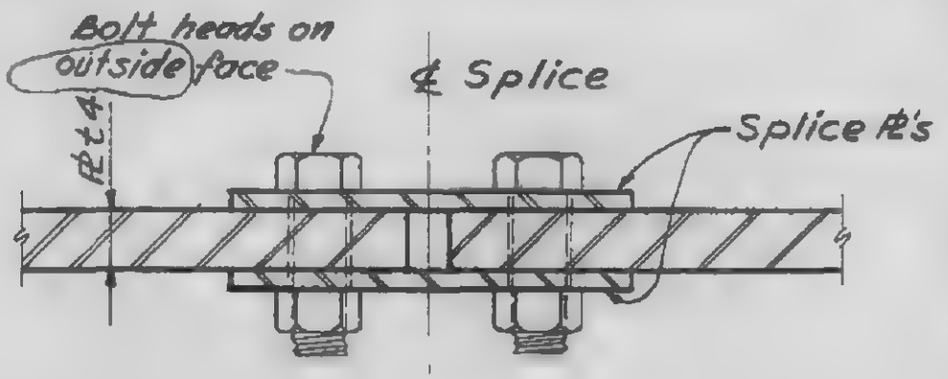

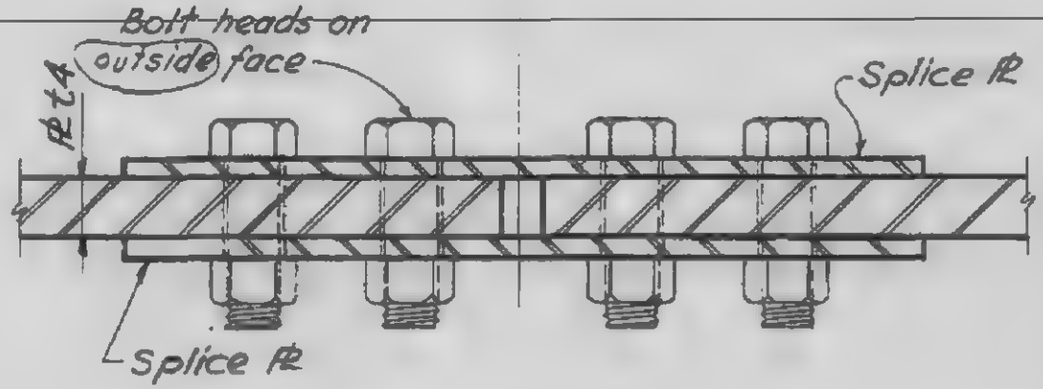

NOTES:
1. For vertical bolt layout, see 4-AB2-26 to 4-AB2-28
2. For splice plate dimensions and bolt size see 4-AB2-30
3. Holes in splice plate to be 1/16" larger than diameter of bolt.
4. At fabricators option, splice plates may be provided with holes matching holes in spandrel, or with complete pattern of holes.

4-AB2-27

SKILLING-HELLE-CHRISTIANSEN-ROBERTSON — Civil & Structural Engineers

PROJECT THE WORLD TRADE CENTER | TITLE EXTERIOR WALL - SPANDREL CONNECTION SCHEDULE | DATE 6- 5-67

REVISED

7-18-69

DETAIL NUMBER	BOLTS A325 NO	BOLTS A325 SIZE	SPLICE PLATE FY 36 WIDTH INCHES	THK IN	LNGTH FT-IN	DIM E INCH	DIM G INCH	DIM S INCH
101	6	7/8	6-3/4	1/4	4- 1	1-1/2	1-7/8	-
102	8	7/8	6-3/4	1/4	4- 1	1-1/2	1-7/8	-
103	10	7/8	6-3/4	1/4	4- 1	1-1/2	1-7/8	-
104	12	7/8	6-3/4	1/4	4- 1	1-1/2	1-7/8	-
105	14	7/8	6-3/4	1/4	4- 1	1-1/2	1-7/8	-
106	16	7/8	6-3/4	1/4	4- 1	1-1/2	1-7/8	-
111	12	7/8	12-3/4	1/4	4- 1	1-1/2	1-7/8	3
112	16	7/8	12-3/4	1/4	4- 1	1-1/2	1-7/8	3
113	20	7/8	12-3/4	1/4	4- 1	1-1/2	1-7/8	3
114	24	7/8	12-3/4	1/4	4- 1	1-1/2	1-7/8	3
121	6	1-1/8	8-3/4	3/8	4- 1	2	2-3/8	-
122	8	1-1/8	8-3/4	3/8	4- 1	2	2-3/8	-
123	10	1-1/8	8-3/4	3/8	4- 1	2	2-3/8	-
124	12	1-1/8	8-3/4	3/8	4- 1	2	2-3/8	-
125	14	1-1/8	8-3/4	3/8	4- 1	2	2-3/8	-
126	16	1-1/8	8-3/4	3/8	4- 1	2	2-3/8	-
131	16	1-1/8	14-3/4	3/8	4- 1	2	2-3/8	3
132	20	1-1/8	14-3/4	3/8	4- 1	2	2-3/8	3
133	24	1-1/8	14-3/4	3/8	4- 1	2	2-3/8	3
134	28	1-1/8	14-3/4	3/8	4- 1	2	2-3/8	3
135	32	1-1/8	14-3/4	3/8	4- 1	2	2-3/8	3
201	8	7/8	6-3/4	1/4	5- 1	1-1/2	1-7/8	-
202	10	7/8	6-3/4	1/4	5- 1	1-1/2	1-7/8	-
203	12	7/8	6-3/4	1/4	5- 1	1-1/2	1-7/8	-
211	20	7/8	12-3/4	1/4	5- 1	1-1/2	1-7/8	3
212	24	7/8	12-3/4	1/4	5- 1	1-1/2	1-7/8	3
221	8	1-1/8	8-3/4	3/8	5- 1	2	2-3/8	-
222	10	1-1/8	8-3/4	3/8	5- 1	2	2-3/8	-
223	12	1-1/8	8-3/4	3/8	5- 1	2	2-3/8	-
224	14	1-1/8	8-3/4	3/8	5- 1	2	2-3/8	-
231	16	1-1/8	14-3/4	3/8	5- 1	2	2-3/8	3
232	20	1-1/8	14-3/4	3/8	5- 1	2	2-3/8	3
233	24	1-1/8	14-3/4	3/8	5- 1	2	2-3/8	3
241	8	1-1/8	8-3/4	3/8	5- 3	2	2-3/8	-
242	10	1-1/8	8-3/4	3/8	5- 3	2	2-3/8	-
251	18	1-1/8	8-3/4	3/8	5- 3	2	2-3/8	-
301	9	7/8	6-3/4	1/4	6- 5	1-1/2	1-7/8	-
302	15	7/8	6-3/4	1/4	6- 5	1-1/2	1-7/8	-
401	11	1-1/8	8-3/4	3/8	8- 0	2	2-3/8	-
402	13	1-1/8	8-3/4	3/8	8- 0	2	2-3/8	-
403	15	1-1/8	8-3/4	3/8	8- 0	2	2-3/8	-
404	17	1-1/8	8-3/4	3/8	8- 0	2	2-3/8	-
405	19	1-1/8	8-3/4	3/8	8- 0	2	2-3/8	-
411	11	1-1/8	8-3/4	3/8	8- 0	2	2-3/8	-
412	13	1-1/8	8-3/4	3/8	8- 0	2	2-3/8	-
413	15	1-1/8	8-3/4	3/8	8- 0	2	2-3/8	-
414	17	1-1/8	8-3/4	3/8	8- 0	2	2-3/8	-
415	19	1-1/8	8-3/4	3/8	8- 0	2	2-3/8	-
416	21	1-1/8	8-3/4	3/8	8- 0	2	2-3/8	-

LICENSED PROFESSIONAL ENGINEER ☆ LESLIE E. ROBERTSON ☆ No. 34360 ☆ UNIVERSITY OF THE STATE OF NEW YORK

WORTHINGTON, SKILLING, HELLE & JACKSON — Civil & Structural Engineers

PROJECT THE WORLD TRADE CENTER | TITLE EXTERIOR WALL - SEAT DETAILS 1013-3511 | DATE 7-10-67

REVISIONS

8-28-67
11-7-67

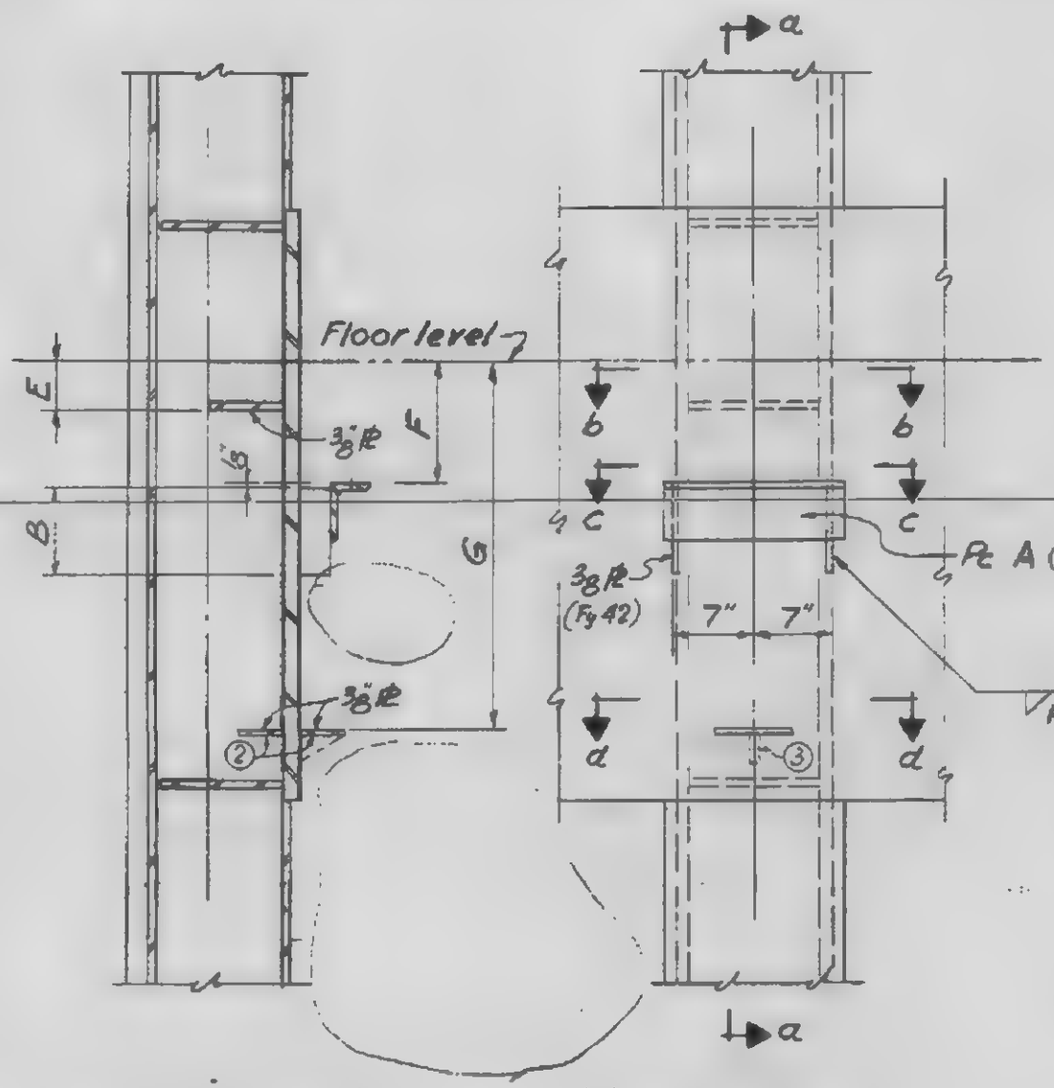

SECTION a-a ELEVATION

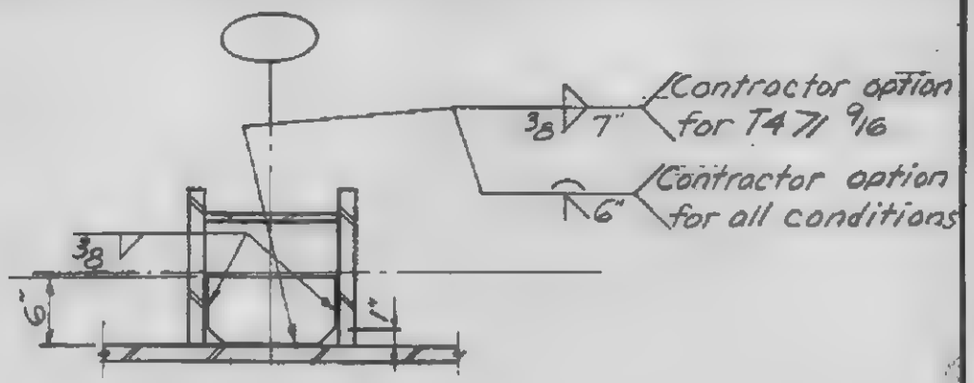

SECTION b-b

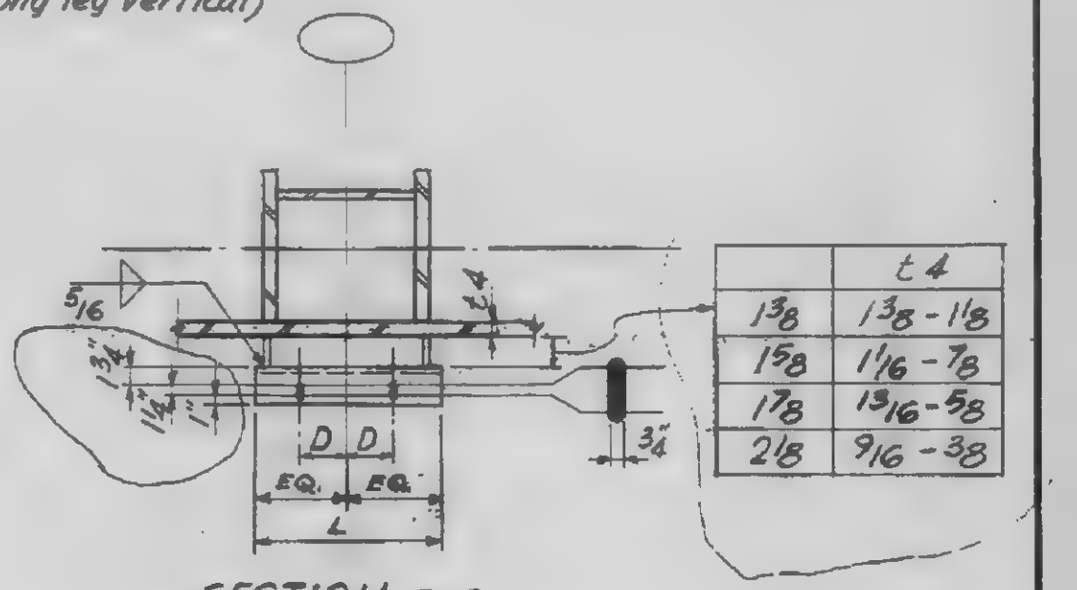

SECTION c-c

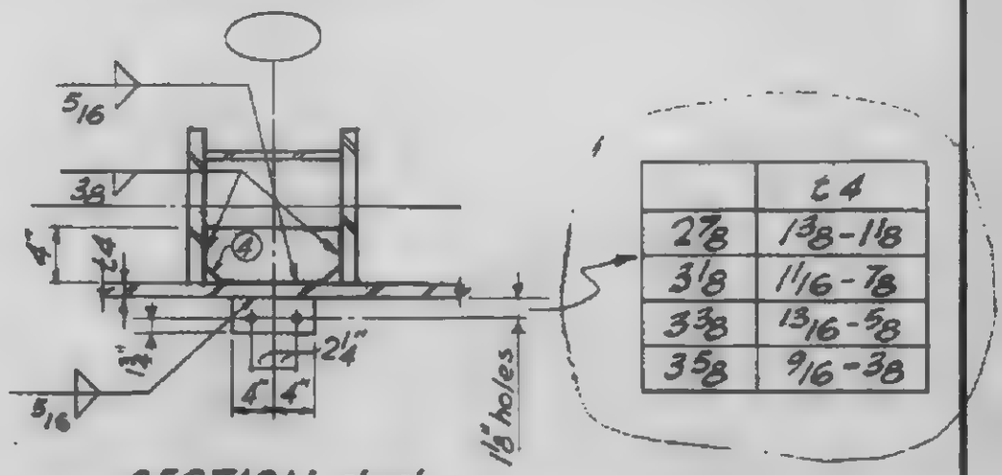

SECTION d-d

NOTES

1. See 4-AB2-35 for schedule
2. Omit these plates if "G" is omitted from schedule
3. Stiffener plate at option of contractor
4. Clip corners of inside plates if necessary to clear welds "5 or "7

LICENSED PROFESSIONAL ENGINEER — LESLIE E. ROBERTSON — No. 34960 — UNIVERSITY OF THE STATE OF NEW YORK

4-AB2-31

WORTHINGTON, SKILLING, HELLE & JACKSON — Civil & Structural Engineers

PROJECT THE WORLD TRADE CENTER | TITLE EXTERIOR WALL - SEAT DETAILS 4064 - 4731 | DATE 7-10-67

REVISIONS

8-28-67
11-7-67
11-30-67
10-18-68
3-12-69
11-10-69
3-16-70

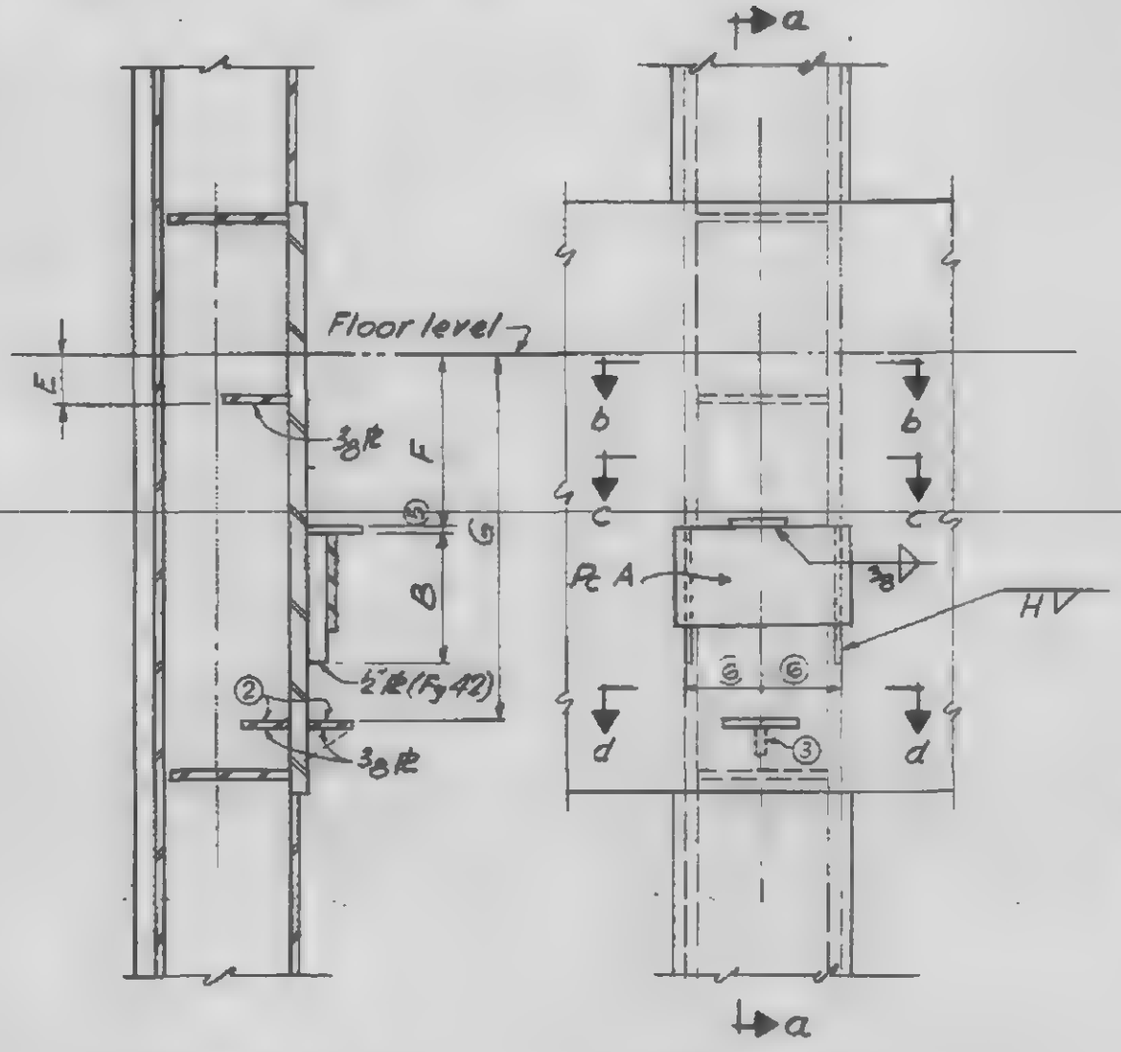

SECTION a-a

ELEVATION

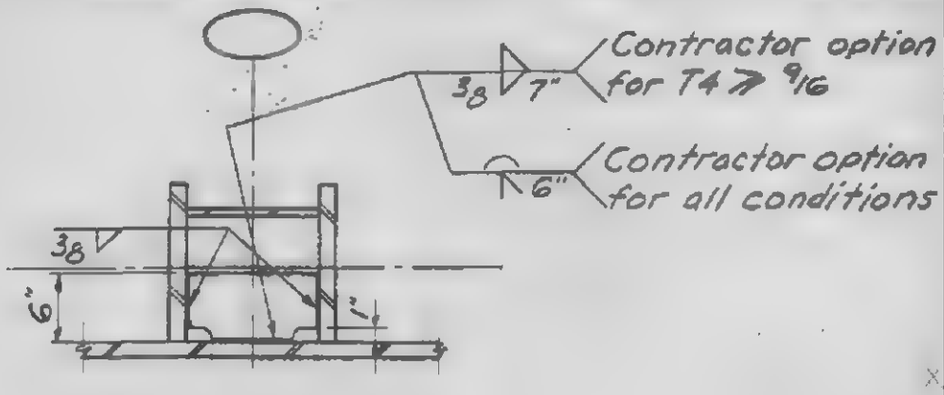

SECTION b-b

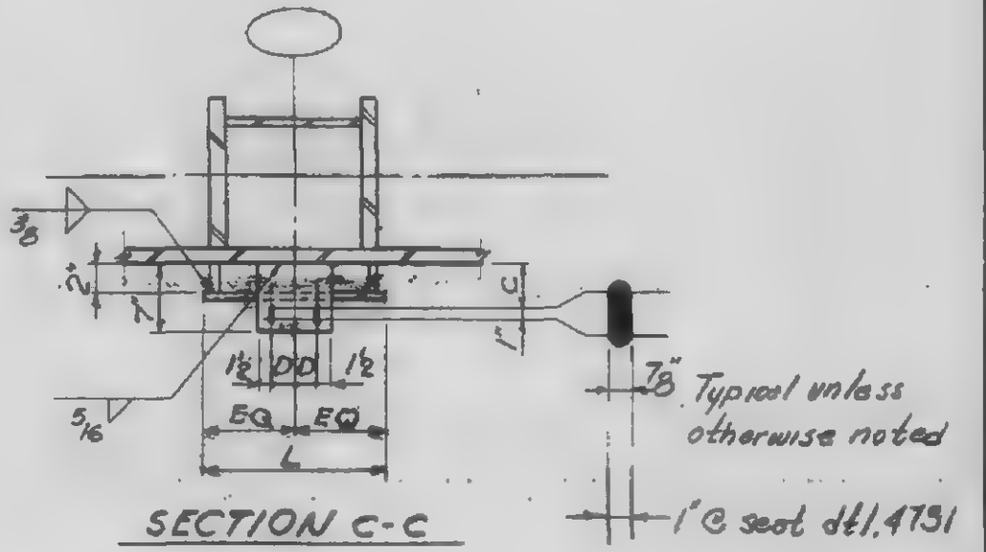

SECTION c-c

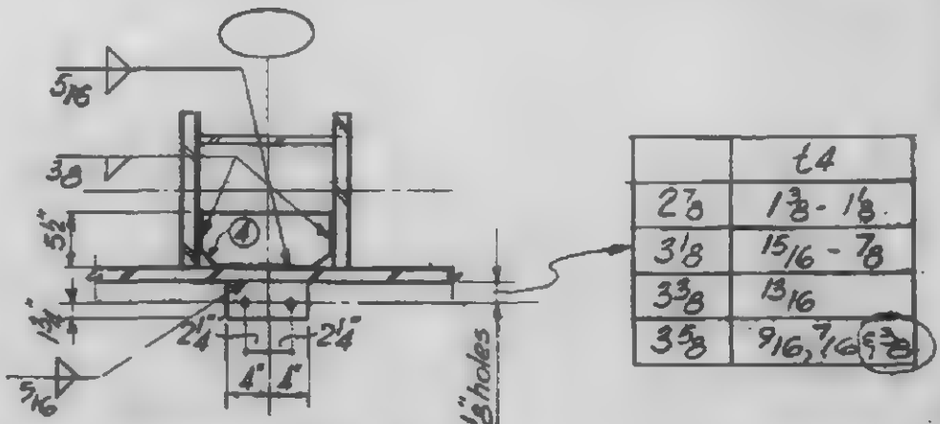

	t4
2⅞	1⅜ - 1⅛
3⅛	15/16 - ⅞
3⅜	13/16
3⅝	9/16, 7/16

SECTION d-d

NOTES

1. See 4-AB2-36, 36 & 37, for schedule
2. Omit these plates if "G" is omitted from schedule
3. Stiffener plate at option of contractor
4. Clip corners of inside plates if necessary to clear welds 5 or 7
5. Thickness of PL same as thickness of piece A
6. This dimension 7¾" at floors 41 and 75; 8" at floors 43 and 77; 5'2" at floor 107, 7" all other floors where seats of this type are required.

REGISTERED PROFESSIONAL ENGINEER — LESLIE E. ROBERTSON — No. 34360 — UNIVERSITY OF THE STATE OF NEW YORK

4-AB2-32

SKILLING - HELLE - CHRISTIANSEN - ROBERTSON Structural & Civil Engineers

PROJECT THE WORLD TRADE CENTER | TITLE EXTERIOR WALL SEAT DETAILS | DATE 7-10-67

REVISIONS
-28-67
11-7-67
7-15-68
10-18-68
3-16-70

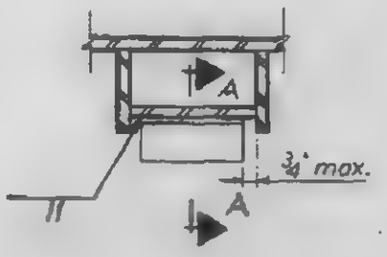

DETAIL 5010
Col. No. 100, 200
300, 400
CASE I

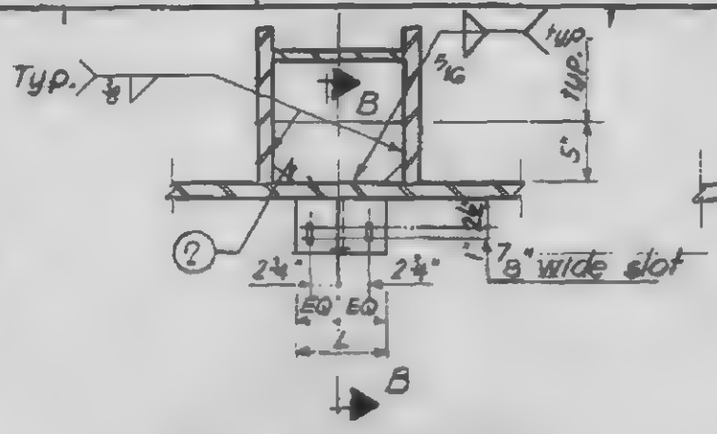

DETAIL 5010 5310
5410, 5510, 5610
All cols. where sch. except case I
CASE II

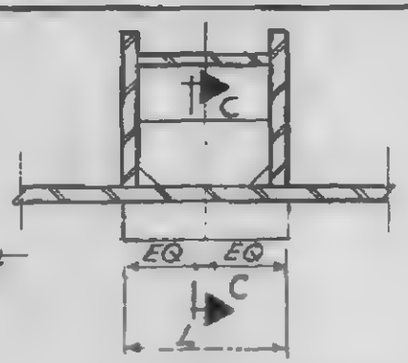

DETAIL 5110
All columns where sch.
not included in case IV
CASE III

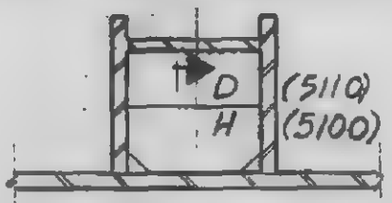

DETAIL 5100
All columns where sch.
DETAIL 5110
Col. No. 205, 207, 216, 244
253, 255, 405, 407, 416
444, 453, 455
CASE IV

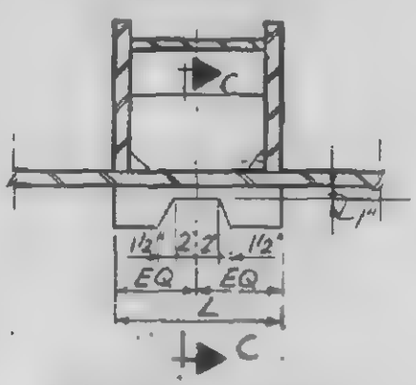

DETAIL 5210
Col. No. 110, 120, 130, 140, 150, 220
230, 240, 310, 320, 330, 340
350, 420, 430, 440
CASE V

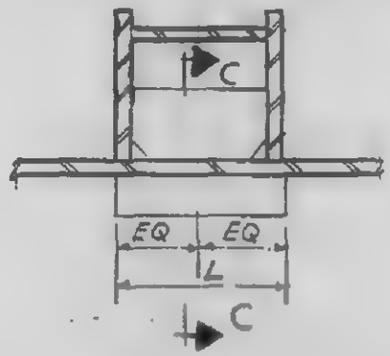

DETAIL 5210
All cols. where scheduled not
included in case V, VII, VIII
CASE VI

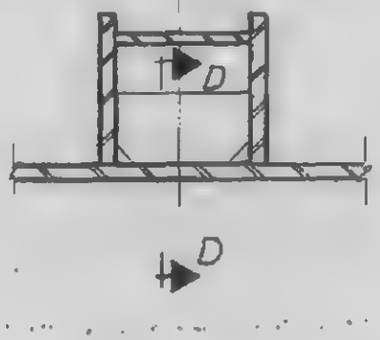

DETAIL 5210
Col. No. 203, 209, 213, 247, 251
257, 403, 409, 413, 447, 451, 457
CASE VII

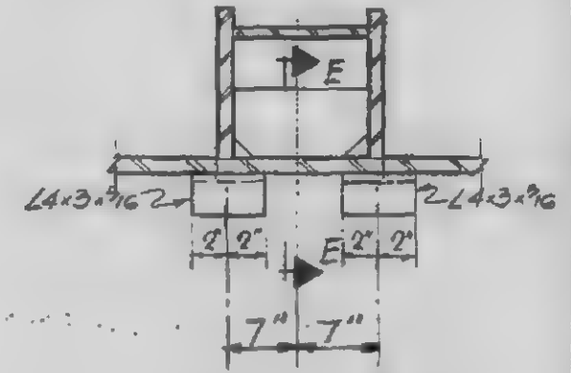

DETAIL 5210
Col. No. 211, 249,
411, 449.
CASE VIII

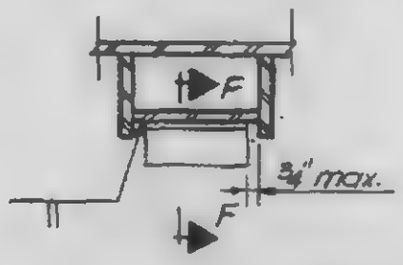

DETAIL 6020
Col. No. 100, 200, 300 & 400
CASE IX

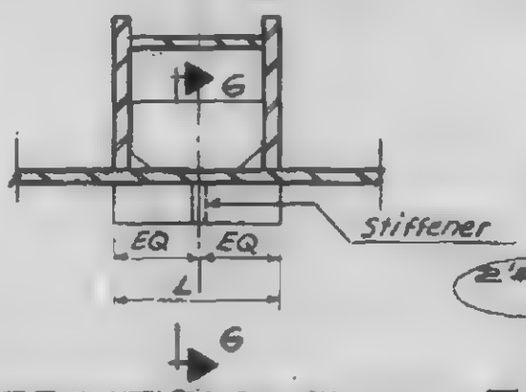

DETAILS 6020 (except case IX)
6220 (except case XI),
6120, 6320, 6520, 6620, 6720, 6B20
CASE X

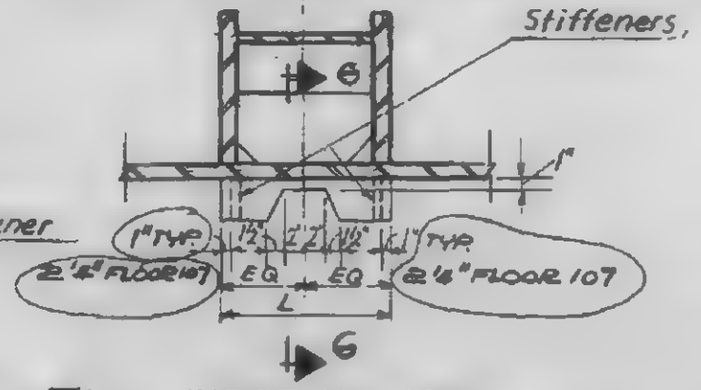

DETAIL 6220
Col. No. 110, 120, 130, 140, 150, 220, 230, 240, 211, 249
310, 320, 330, 340, 350, 420, 430, 440, 411, 449
CASE XI

For Sections
A-A thru H-H
see 4-AB2-33.1

4-AB2-33

LICENSED PROFESSIONAL ENGINEER
LESLIE E. ROBERTSON
No. 34960
UNIVERSITY OF THE STATE OF NEW YORK

SKILLING - HELLE - CHRISTIANSEN - ROBERTSON Structural & Civil Engineers

PROJECT THE WORLD TRADE CENTER | TITLE EXTERIOR WALL SEAT DETAILS | DATE 11-7-67

REVISIONS

10-18-68

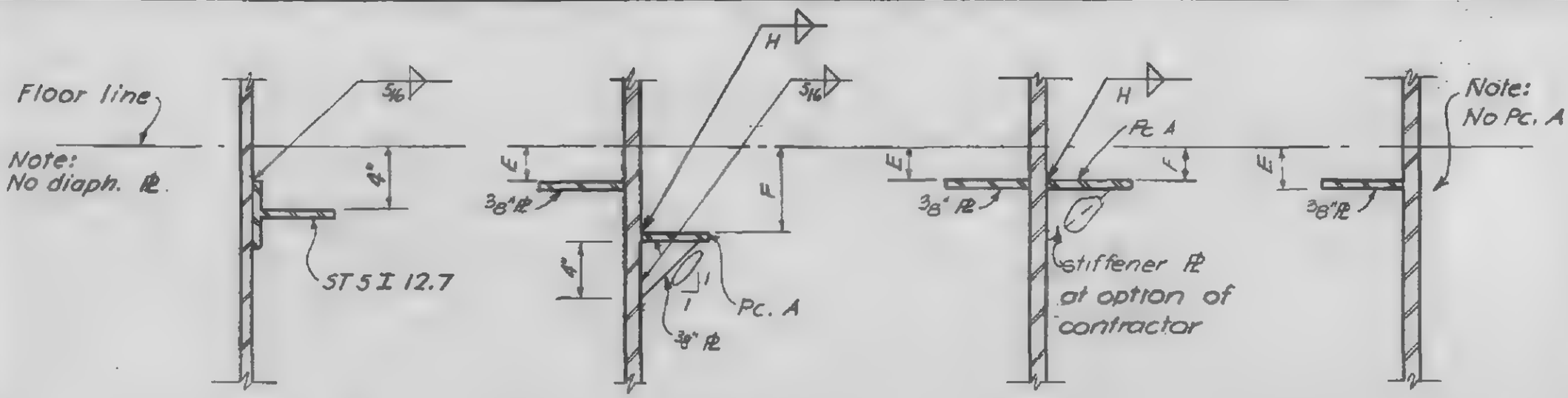

Section A-A Section B-B Section C-C Section D-D

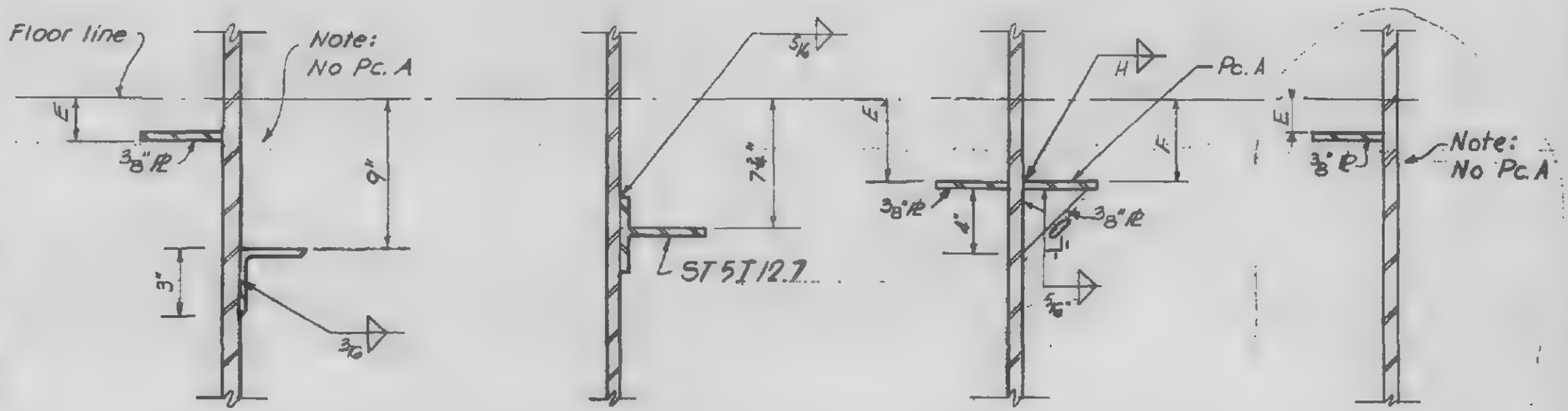

Section E-E Section F-F Section G-G Section H-H

Notes:

1. See 4-AB2-36 for dimension
2. Clip corners of inside plate where necessary to clear welds #5 or #7

4-AB2-33.1

LICENSED PROFESSIONAL ENGINEER
LESLIE E. ROBERTSON
No. 34960
UNIVERSITY OF THE STATE OF NEW YORK

WORTHINGTON, SKILLING, HELLE & JACKSON — Consulting Structural Engineers

PROJECT THE WORLD TRADE CENTER | TITLE EXTERIOR WALL - SEAT DETAILS TOIC - T494 | DATE 7-10-67

REVISIONS
8-28-67
11-7-67
3-16-70

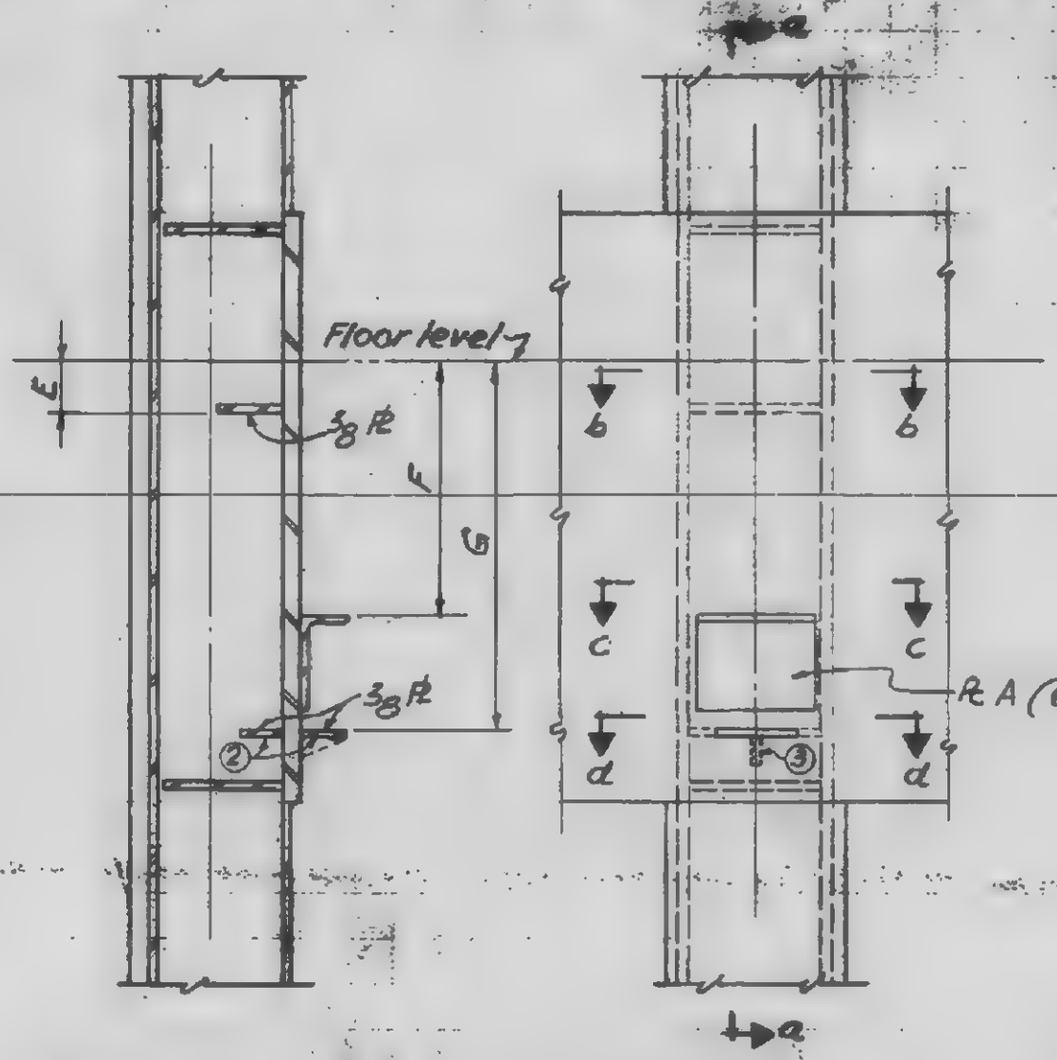

SECTION a-a

ELEVATION

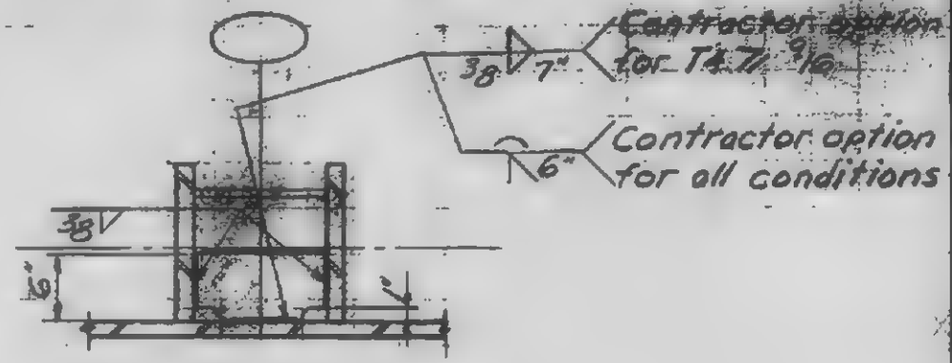

SECTION b-b

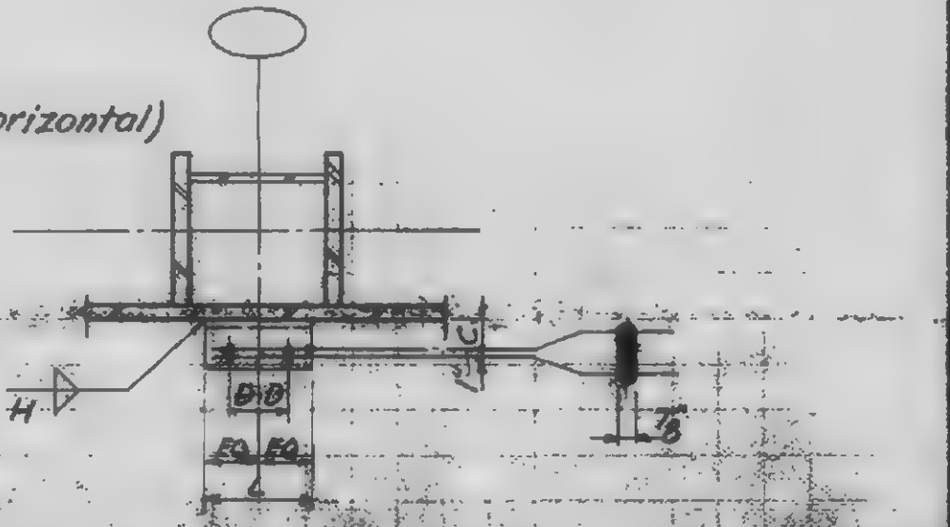

SECTION c-c

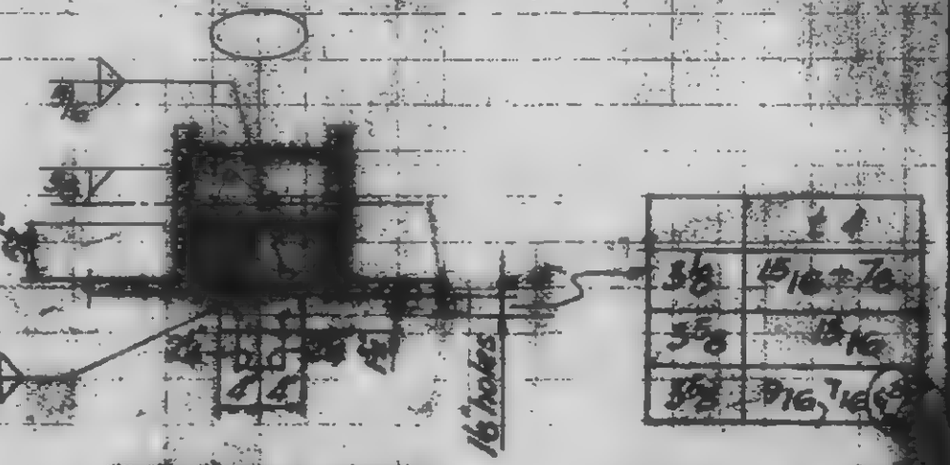

SECTION d-d

NOTES
1. See 4-AB2-36 for schedule
2. Omit these plates if B is omitted from schedule
3. Stiffener plate at option of contractor
4. Clip corners of inside plates if necessary to clear weld at [illegible]

4-AB2-36

SKILLING, HELLE, CHRISTIANSEN, ROBERTSON — Structural & Civil Engineers

PROJECT: THE WORLD TRADE CENTER | TITLE: EXTERIOR WALL - SEAT DETAIL SCHEDULE I | DATE: 10-18-68

REVISIONS

DIMENSIONS IN INCHES

SEAT DET	PIECE A	FY36	L	B	C	D	E	F	G	H
1013	L 4X4	X1/2	16	8	-	1-5/8	5-1/2	8-1/2	30-3/4	5/16
1111	L 4X4	X1/2	16	8	-	4-1/4	4	8-1/2	32	5/16
1113	L 6X4	X3/8	16	8	-	4-1/4	5-1/2	10	29-1/2	3/8
1212	L 6X4	X3/8	16	8	-	1-5/8	5-1/2	8-3/4	30-3/4	3/8
1311	L 4X4	X1/2	16	8	-	5-1/4	4	8-1/2	32	5/16
1313	L 4X4	X1/2	16	8	-	1-5/8	4	8-1/2	32	5/16
1411	L 6X4	X5/8	16	9	-	5-1/4	4	8-1/2	32	3/8
1511	L 6X4	X5/8	16	10	-	5-1/4	4	8-1/2	32	3/8
1611	L 6X4	X3/4	16	11	-	5-1/4	4	8-1/2	32	3/8
2010	L 4X4	X5/8	16	8	-	1-5/8	4	14-5/8	-	3/8
2110	L 6X4	X5/8	16	9	-	4-1/4	4	14-5/8	-	3/8
~~2210~~	~~L 6X4~~	~~X5/8~~	~~16~~	~~10~~	~~-~~	~~1-5/8~~	~~4~~	~~14-5/8~~	~~-~~	~~3/8~~
2310	L 6X4	X5/8	16	9	-	5-1/4	4	14-5/8	-	3/8
2410	L 6X4	X5/8	16	10	-	5-1/4	4	14-5/8	-	3/8
2510	L 6X4	X3/4	16	11	-	5-1/4	4	14-5/8	-	3/8
2610	L 7X4	X3/4	16	12	-	5-1/4	4	14-5/8	-	3/8
3013	L 4X4	X5/8	16	8	-	1-5/8	5-1/2	8-1/2	30-3/4	3/8
3212	L 6X4	X5/8	16	9	-	1-5/8	5-1/2	8-1/2	30-3/4	3/8
3311	L 4X4	X5/8	16	8	-	5-1/4	4	8-1/2	32	3/8
3313	L 4X4	X5/8	16	8	-	1-5/8	4	8-1/2	32	3/8
3411	L 6X4	X5/8	16	10	-	5-1/4	4	8-1/2	32	3/8
3511	L 6X4	X3/4	16	11	-	5-1/4	4	8-1/2	32	3/8
4064	P 8X 1/2		19	8	4-1/2	1-3/4	7-3/4	24-1/4	46	3/8
4110	P 9X 1/2		16	9	4-1/2	2-3/4	4	18	-	3/8
4120	P 9X 1/2		16	9	4-1/2	2-3/4	4	18-1/2	-	3/8
4140	P 9X 1/2		16	9	4-1/2	2-3/4	6	18	-	3/8
4141	P 9X 1/2		16	9	4-1/2	1-3/4	4	22-1/2	43	3/8
4174	P 9X 5/8		19	12	4-1/2	2-3/4	7-3/4	24-1/4	46	3/8
4184	P 9X 1/2		19	9	4-1/2	1-3/4	7-3/4	26-1/4	46	3/8
4241	P 9X 5/8		16	12	4-1/2	2-3/4	4	22-1/2	43	3/8
4274	P 9X 5/8		19	12	4-1/2	2-3/4	7-3/4	24-1/4	46	3/8
4284	P 9X 5/8		19	12	4-1/2	2-3/4	7-3/4	26-1/4	46	3/8
4324	P11X 7/8		19	14	4-1/2	2-3/4	7-3/4	22-3/4	46	3/8
4410	P11X 7/8		16	17	4-1/2	2-3/4	4	16	-	3/8
4424	P11X 7/8		19	17	4-1/2	2-3/4	7-3/4	22-3/4	46	3/8
4510	P12X1		16	20	4-1/2	2-3/4	4	18	-	3/8
4511	P12X1		16	20	4-1/2	2-3/4	4	22	43	3/8
4524	P12X1		19	20	4-1/2	2-3/4	7-3/4	22-3/4	46	3/8
4530	P12X1		16	20	4-1/2	2-3/4	5-1/2	17-1/2	-	3/8
4531	P12X1		16	20	4-1/2	2-3/4	5-1/2	23-1/2	43	3/8
4540	P12X1		16	20	4-1/2	2-3/4	6	18	-	3/8

LICENSED PROFESSIONAL ENGINEER — LESLIE E. ROBERTSON — No. 34360 — UNIVERSITY OF THE STATE OF NEW YORK

SKILLING, HELLE, CHRISTIANSEN, ROBERTSON — Structural & Civil Engineers

PROJECT: THE WORLD TRADE CENTER | TITLE: EXTERIOR WALL - SEAT DETAIL SCHEDULE II | DATE: 3-12-69

REVISIONS

DIMENSIONS IN INCHES

SEAT DET	PIECE A	FY36	L	B	C	D	E	F	G	H
4611	P 8X1		16	12	4-1/2	2-3/4	4	10	32	7/16
4612	P 8X1		16	12	4-1/2	2-3/4	5-1/2	10	29-1/2	7/16
4621	P10X1		16	15	4-1/2	2-3/4	4	10	32	7/16
4622	P10X1		16	15	4-1/2	2-3/4	5-1/2	10	29-1/2	7/16
4631	P15X1		16	22	4-1/2	2-3/4	4	10	32	5/8
4632	P15X1		16	22	4-1/2	2-3/4	4	14	32	5/8
5010	P 5X	3/8	8	-	-	-	5-1/8	8-7/8	-	5/16
5100	-	-	-	-	-	-	4	-	-	-
5110	P 4X	3/8	14	-	-	-	4	4	-	5/16
5210	P 4X	3/8	14	-	-	-	4	4	-	5/16
5310	P 5X	3/8	8	-	-	-	5-1/8	6-7/8	-	5/16
5410	P 5X	3/8	8	-	-	-	5-1/8	8-7/8	-	5/16
5510	P 5X	3/8	8	-	-	-	5-1/8	8-7/8	-	5/16
5610	P 5X	3/8	8	-	-	-	5-1/8	8-7/8	-	5/16
6020	P 4X	3/8	14	-	-	-	13-9/16	13-9/16	-	5/16
6120	P 4X	3/8	14	-	-	-	13-9/16	13-9/16	-	5/16
6220	P 4X	3/8	14	-	-	-	13-9/16	13-9/16	-	5/16
6320	P 4X	3/8	14	-	-	-	13-9/16	13-9/16	-	5/16
6520	P 4X	3/8	14	-	-	-	13-9/16	13-9/16	-	5/16
6620	P 4X	3/8	14	-	-	-	13-9/16	13-9/16	-	5/16
6720	P 4X	3/8	14	-	-	-	13-9/16	13-9/16	-	5/16
6820	P 4X	3/8	14	-	-	-	13-9/16	13-9/16	-	5/16
7010	L 4X6	X5/8	9	-	2-1/2	1-1/8	13-9/16	13-9/16	-	5/16
7020	L 4X6	X5/8	9	-	2-1/2	1-3/4	9-1/4	21-3/4	-	5/16
7030	L 4X6	X5/8	9	-	2-1/2	1-3/4	5-1/2	13-1/2	-	5/16
7220	L 6X6	X3/4	12	-	2-1/2	1-3/4	4	18-1/2	-	3/8
7221	L 6X6	X3/4	12	-	2-1/2	1-3/4	4	18-1/2	43	3/8
7230	L 6X6	X3/4	12	-	2-1/2	2-3/4	6	18	-	3/8
7240	L 6X6	X3/4	12	-	2-1/2	2-3/4	5-1/2	17-1/2	-	3/8
7241	L 6X6	X3/4	12	-	2-1/2	1-3/4	5-1/2	20	43	3/8
7321	L 8X6	X3/4	14	-	2-1/2	1-3/4	4	18-1/2	43	3/8
7354	L 8X6	X3/4	16	-	2-1/2	1-3/8	7-3/4	24-1/4	46	3/8
7364	L 8X6	X3/4	16	-	2-1/2	1-3/4	7-3/4	24-1/4	46	3/8
7440	L 8X6	X7/8	14	-	2-1/2	2-3/4	4	18	-	7/16
7441	L 8X6	X7/8	14	-	2-1/2	1-3/4	4	22-1/2	43	7/16
7450	L 8X6	X7/8	14	-	2-1/2	1-3/4	6	18	-	7/16
7464	L 8X6	X7/8	16	-	2-1/2	1-3/4	7-3/4	24-1/4	46	7/16
7494	L 8X6	X7/8	16	-	2-1/2	1-3/4	9-1/4	23-3/4	46	7/16

LICENSED PROFESSIONAL ENGINEER — LESLIE E. ROBERTSON — No. 34360 — UNIVERSITY OF THE STATE OF NEW YORK

SKILLING, HELLE, CHRISTIANSEN, ROBERTSON — Structural & Civil Engineers

PROJECT	TITLE	DATE
THE WORLD TRADE CENTER	EXTERIOR WALL - SEAT DETAIL SCHEDULE III	11/10/69

REVISIONS

DIMENSIONS IN INCHES

SEAT DET	PIECE A	FY36	L	B	C	D	E	F	G	H
4711	P 9X	5/8	16	12	4-1/2	1-3/4	7-3/4	24-1/4	46	3/8
4712	P 9X	5/8	16	14	4-1/2	1-3/4	7-3/4	26-1/4	46	3/8
4721	P11X	7/8	16	17	4-1/2	2-3/4	7-3/4	22-3/4	46	3/8
4722	P12X1		16	20	4-1/2	2-3/4	7-3/4	22-3/4	46	3/8
4731	P12X1		16	23	4-1/2	2-3/4	7-3/4	22-3/4	46	3/8

LICENSED PROFESSIONAL ENGINEER
LESLIE E. ROBERTSON
No. 34360
UNIVERSITY OF THE STATE OF NEW YORK

SKILLING, HELLE, CHRISTIANSEN, ROBERTSON — Structural & Civil Engineers

PROJECT: THE WORLD TRADE CENTER | TITLE: EXTERIOR WALL -107 TO 110 - TUBE DETAILS | DATE: 4-12-67

REVISIONS
8/15/69
12/15/69
2-26-70
3-16-70
4-27-70

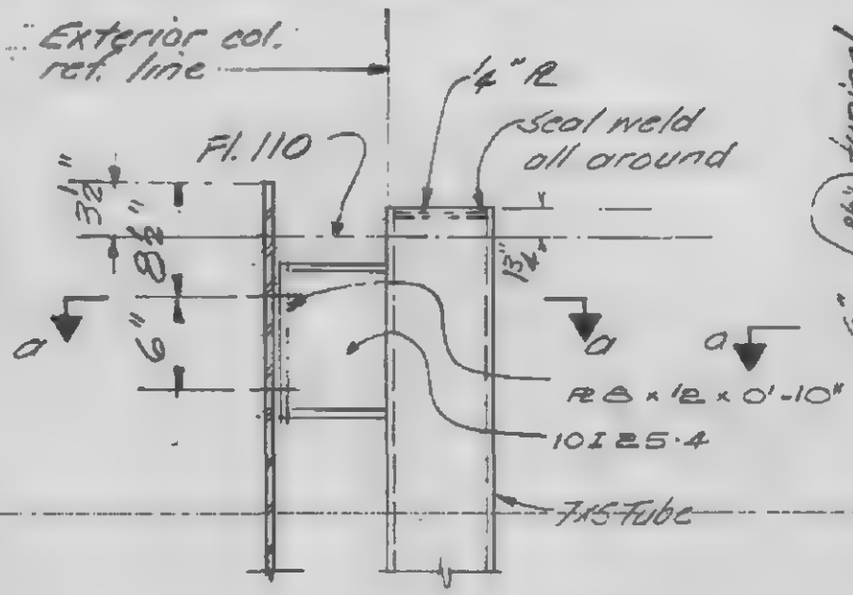

Detail 4

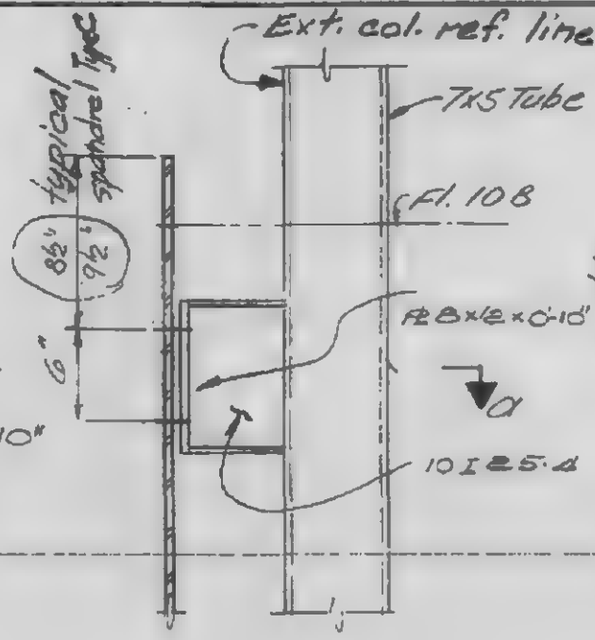

Detail 5

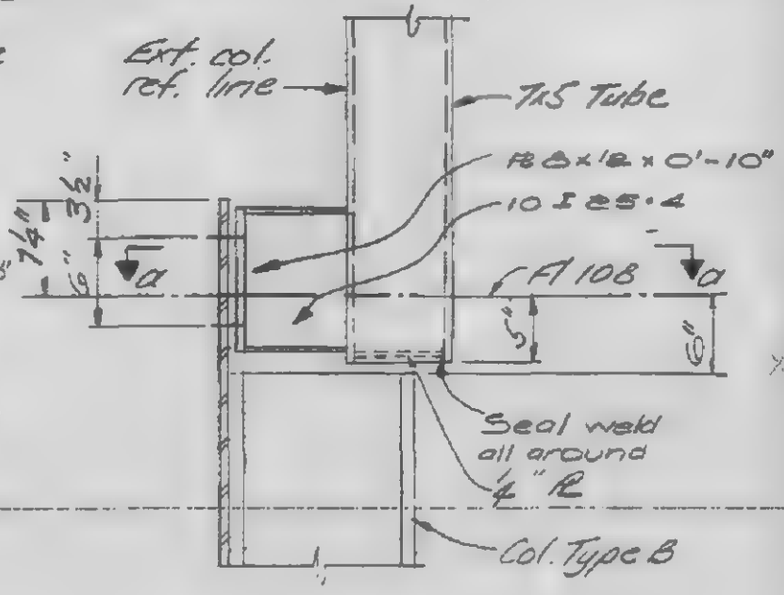

Detail 6

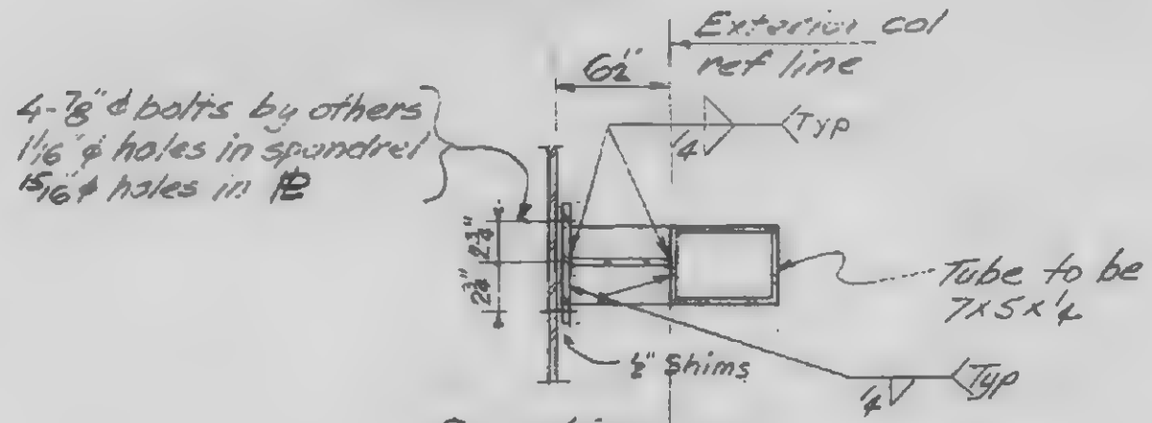

Section a-a

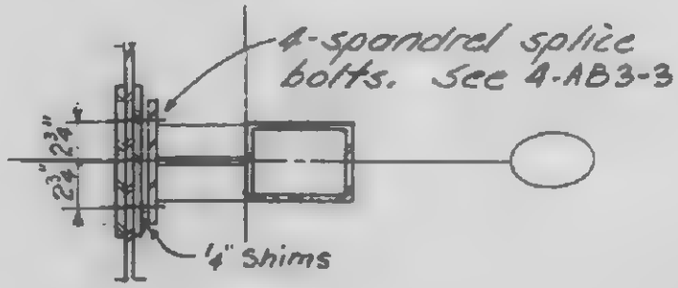

Section a-a
of Spandrel Splice

DESIGNED: J
DRAWN: J. A.
REVIEWED: W. A. B.

4-AB3-10

SKILLING, HELLE, CHRISTIANSEN, ROBERTSON — Structural & Civil Engineers

PROJECT: THE WORLD TRADE CENTER | TITLE: EXTERIOR WALL-SPLICE DETAIL - FLOOR 107 | DATE: 12-15-69

REVISIONS
2-26-70
3-16-70
8-3-70R

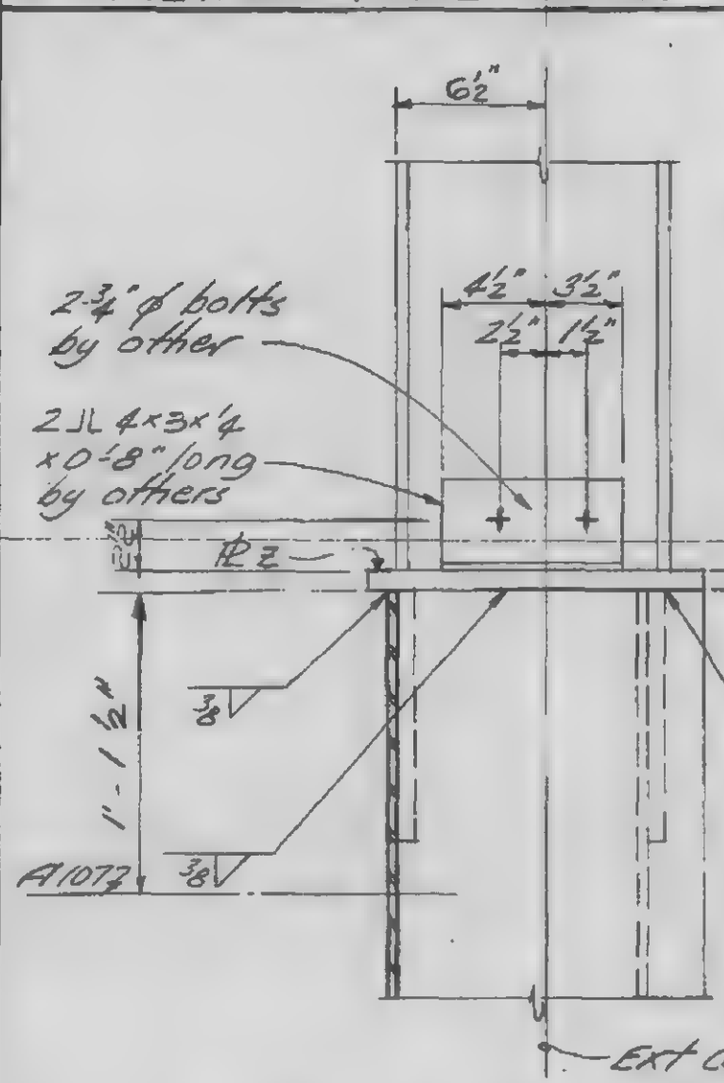

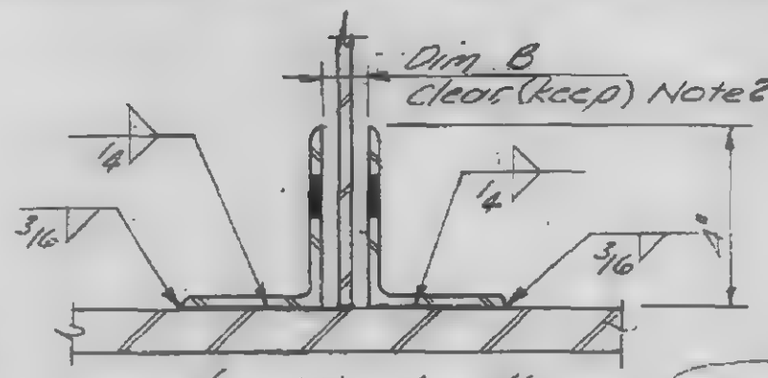

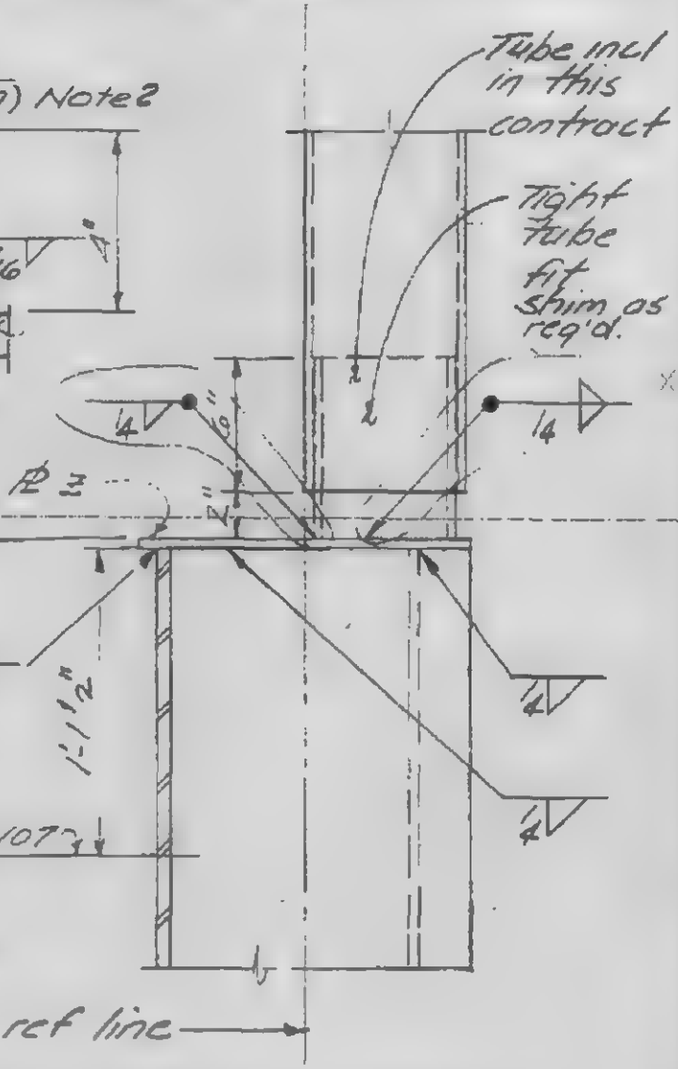

All work on & below this line by others

Notes:
1. Welding shall be accomplished using E70XX low hydrogen electrodes.
2. Shim as required with 18 ga. min. shims
3. See 4-A3-2 & 4-B3-2 for location of columns

Ext col ref line

Ext col ref line

Detail 40 @ WF & Type A & B

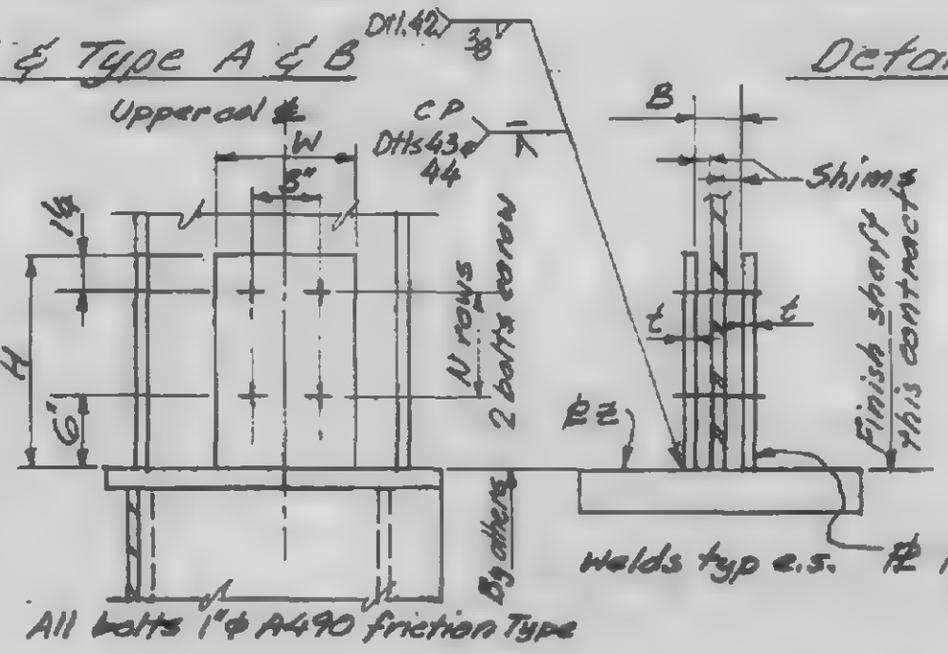

Col. Type	Dim. B	℄ * Z
Type A1 (A9 & A11)	5⅛"	1"
Type A2, (A6 & A8)	7⅛"	1½"
Type A3 & (A7)	4"	1½"
Type (A4 & A5)	7⅛"	1"
(Type A10)	½"	1"
Type B1	5⅛"	1"
Type B2, B3 (&B4)	7⅛"	1½"
7x5 Tube	—	4"
12 WF 40-50	½"	1"

* finished dimension

Detail 41 @ 7x5 Tube

Dtl No	N rows	Tot No bolts	W	H	t
42	1	2	8	7¼	⅜
43	2	4	8	1'-3"	⅝
44	3	6	5¾	1'-4"	1¼

Details 42, 43 & 44

DESIGNED J.A.
DRAWN J.A.
REVIEWED W.A.B.

4-A63-11

WORTHINGTON, SKILLING, HELLE & JACKSON — Civil & Structural Engineers

PROJECT: THE WORLD TRADE CETER | TITLE: EXTERIOR WALL-107 to 110, NOTES & INDEX | DATE: 4-1

REVISIONS
11-7-67
Printed 1-3-69
2-3-69
3-3-69
4-1-69
Printed 5-1-69
8-15-69
12-15-69
8-3-70R

NOTES

1. See Key Plan, this sheet, for locations of wall elevations. All wall elevations are viewed from the inside looking outward.
2. All wide flange column material (columns Type A&B) shall be Fy42 unless otherwise noted.
3. Structural steel tubing shall be seamless and shall conform to ASTM A501.
4. All other material, including detail material, shall be Fy36 unless otherwise noted.
5. All welding shall be accomplished using E70XX low hydrogen electrodes or other equivalent approved welding process.
6. All bolts shall be Friction Type A325 unless otherwise noted.
7. All bolts are furnished by others except shipping bolts.

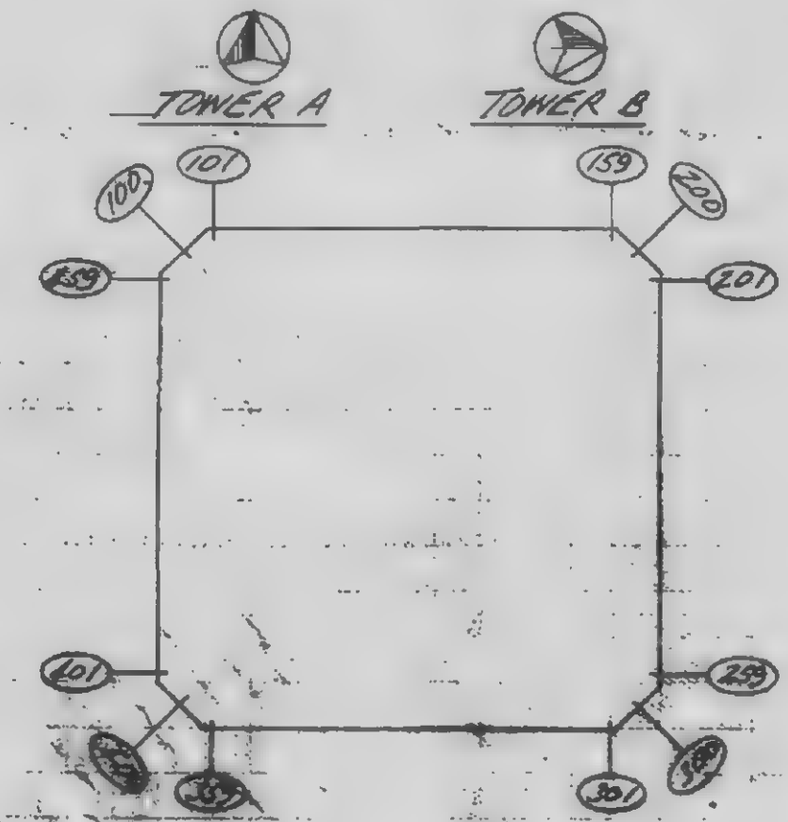

KEY PLAN

INDEX

4-AB3-1 Notes & Index
4-A3-2.1 Column & Spandrel Sched.-Tower A
2.2
2.3
2.4
4-B3-2.1 Column & Spandrel Sched- Tower B
2.2
2.3
2.4
4-AB3-3 Spandrel Splices
4-AB3-4 Typical Sections
4-AB3-5.1 Column Details
4-AB3-5.2 Column Types
4-AB3-6 Spandrel Types
4-AB3-7.1 Connections Floor 108
4-AB3-7.2 Connections Floor 108
4-AB3-7.3 Connections Floor 108
4-AB3-8 Connections Floor 110
4-AB3-8.2 Connections Floor 110
4-AB3-9 Corner Details
4-AB3-10 Tube Details
4-AB3-11 Exterior Wall Splice Detail - Floor 107

4-AB3

E 12/30

SKILLING, HELLE, CHRISTIANSEN, ROBERTSON — Structural & Civil Engineers

PROJECT: THE WORLD TRADE CENTER | TITLE: EXT WALL - 107 TO 110 - COL & SPANDREL SCH - TOWER A | DATE: 8-15-69

REVISIONS
10-23-69
12-15-69
Conn #4b added
2-26-70
3-16-70

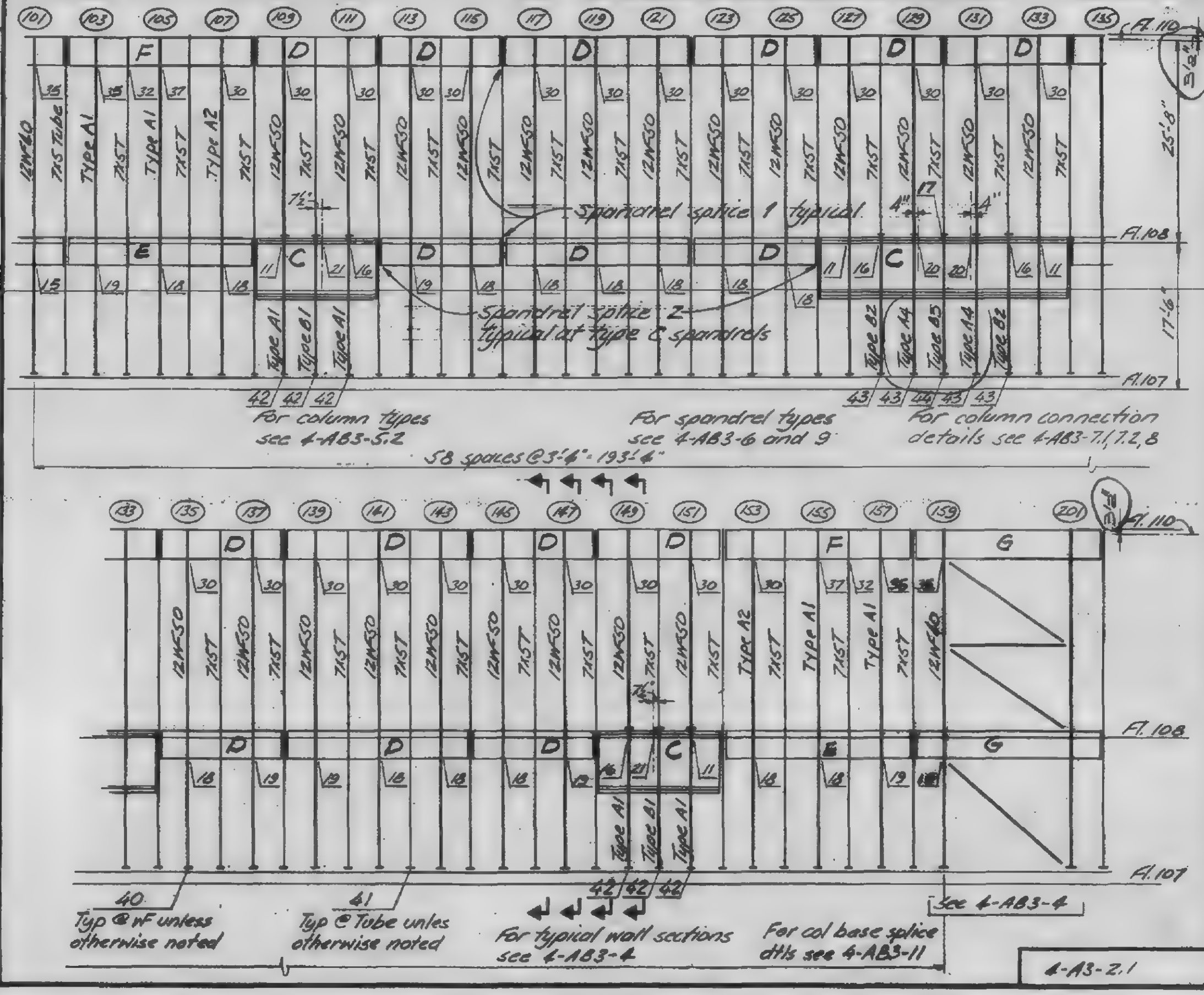

DESIGNED J.H.
DRAWN J.A.
REVIEWED W.H.B.

4-A3-2.1

SKILLING, HELLE, CHRISTIANSEN, ROBERTSON — Structural & Civil Engineers

PROJECT: THE WORLD TRADE CENTER

TITLE: EXT WALL - 107 TO 110 - COL & SPANDREL SCH - TOWER A

DATE: 8-16-69

REVISIONS
10-23-69
12-15-69
Conn dtls added
2-26-70
3-16-70

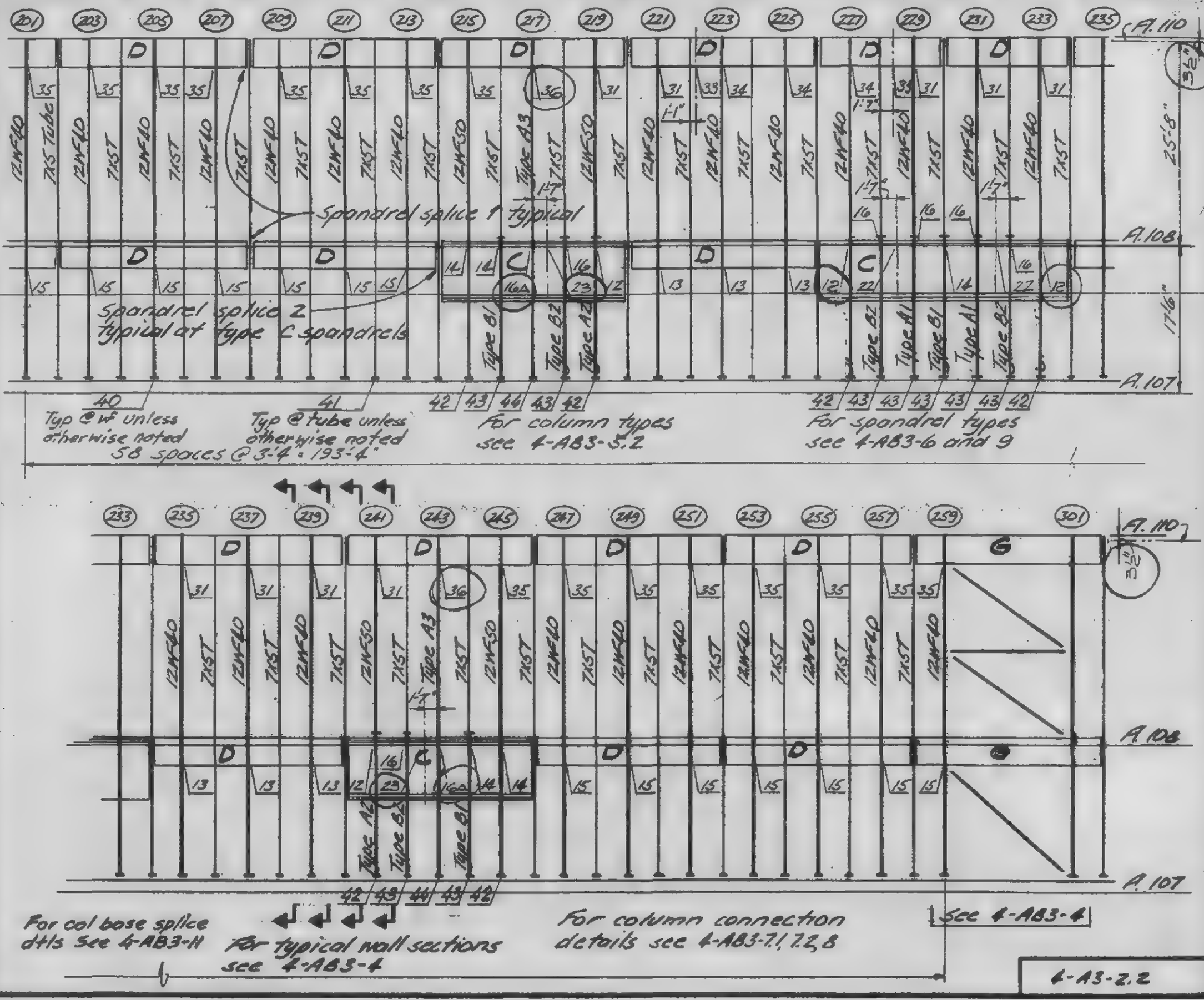

DESIGNED J.H.
DRAWN J.A.
REVIEWED W.H.C.

4-A3-2.2

SKILLING, HELLE, CHRISTIANSEN, ROBERTSON — Structural & Civil Engineers

PROJECT THE WORLD TRADE CENTER | TITLE EXT WALL - 107 TO 110 - COL & SPANDREL SCH - TOWER A | DATE 8-15-69

REVISIONS
10-23-69
12-15-69
Conn dtls added
2-26-70
3-16-70

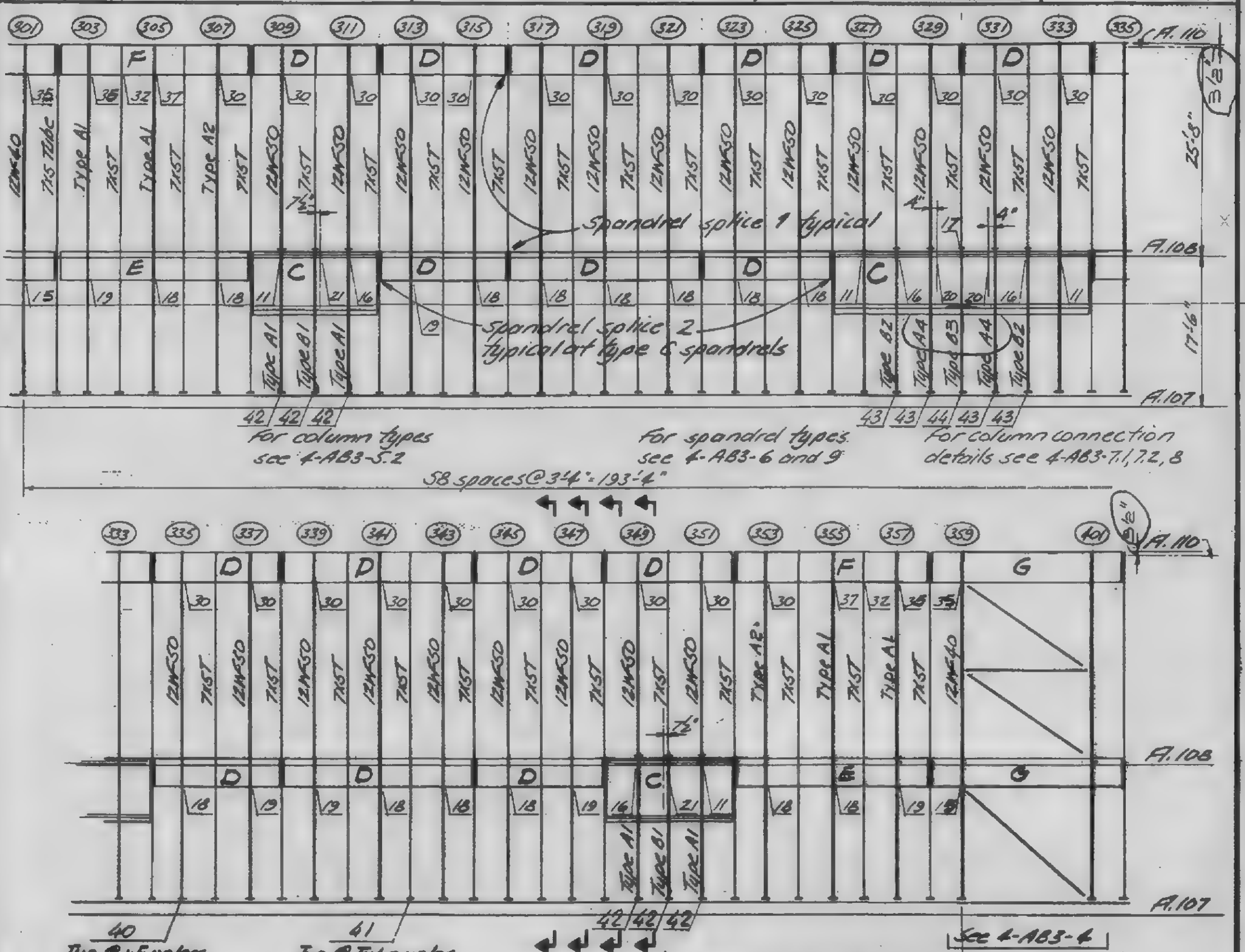

DESIGNED J.H.
DRAWN J.A
REVIEWED A.H.B.

4-A3-2.3

SKILLING, HELLE, CHRISTIANSEN, ROBERTSON — Structural & Civil Engineers

PROJECT: THE WORLD TRADE CENTER

TITLE: EXT WALL-107 TO 110-COL & SPANDREL SCH - TOWER A

DATE: 8-15-69

REVISIONS
10-23-69
12-15-69
Conn dtls added
2-26-70
3-16-70

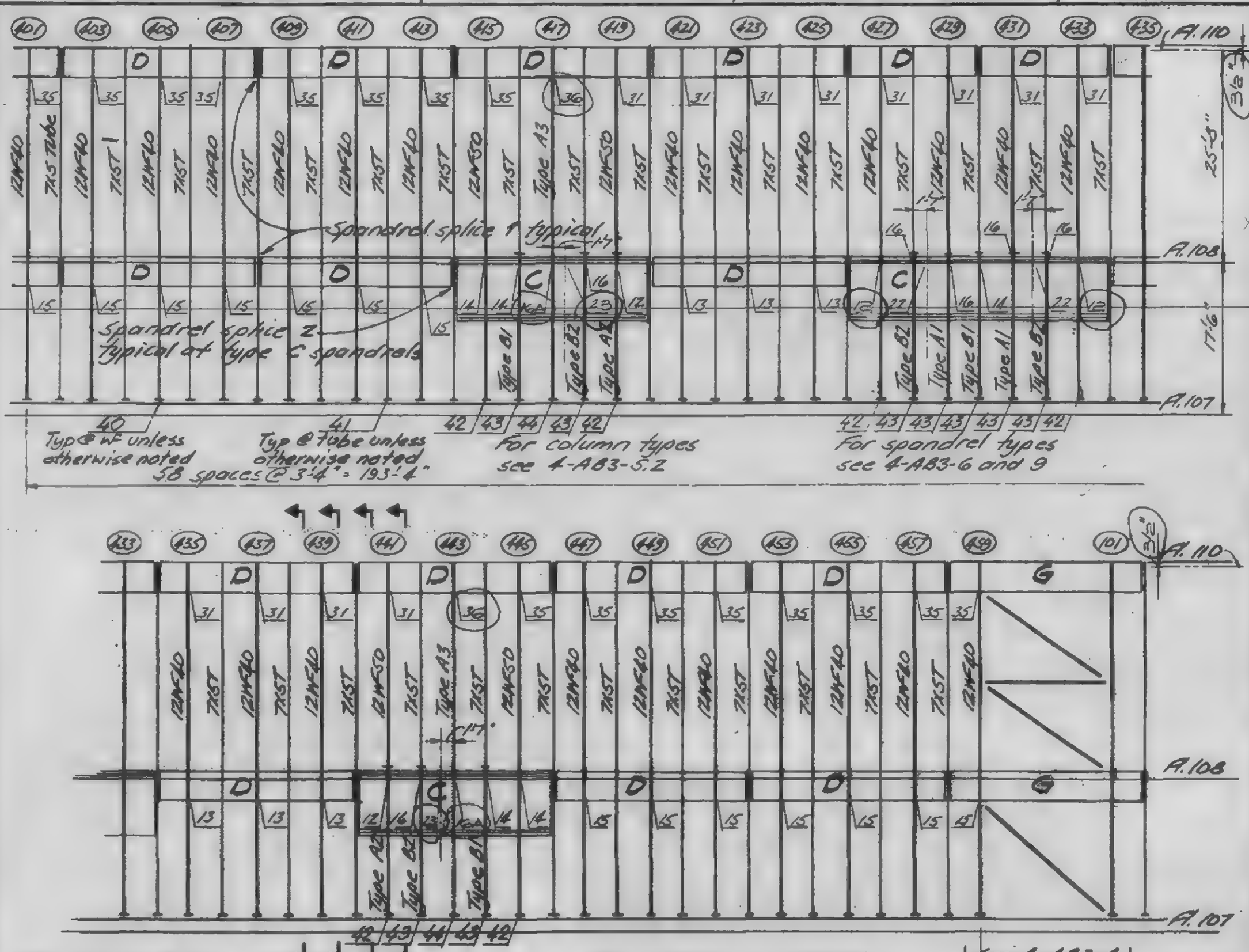

DESIGNED J.H.
DRAWN J.A.
REVIEWED N.H.C.

4-A3-2.4

SKILLING, HELLE, CHRISTIANSEN, ROBERTSON — Structural & Civil Engineers

PROJECT: THE WORLD TRADE CENTER

TITLE: EXT WALL - 101' TO 110' COL & SPANDREL SCH - TOWER B

DATE: 9-2-69

REVISIONS

10-23-69
12-15-69
Conn dtls added
2-26-70
3-16-70
8-3-70

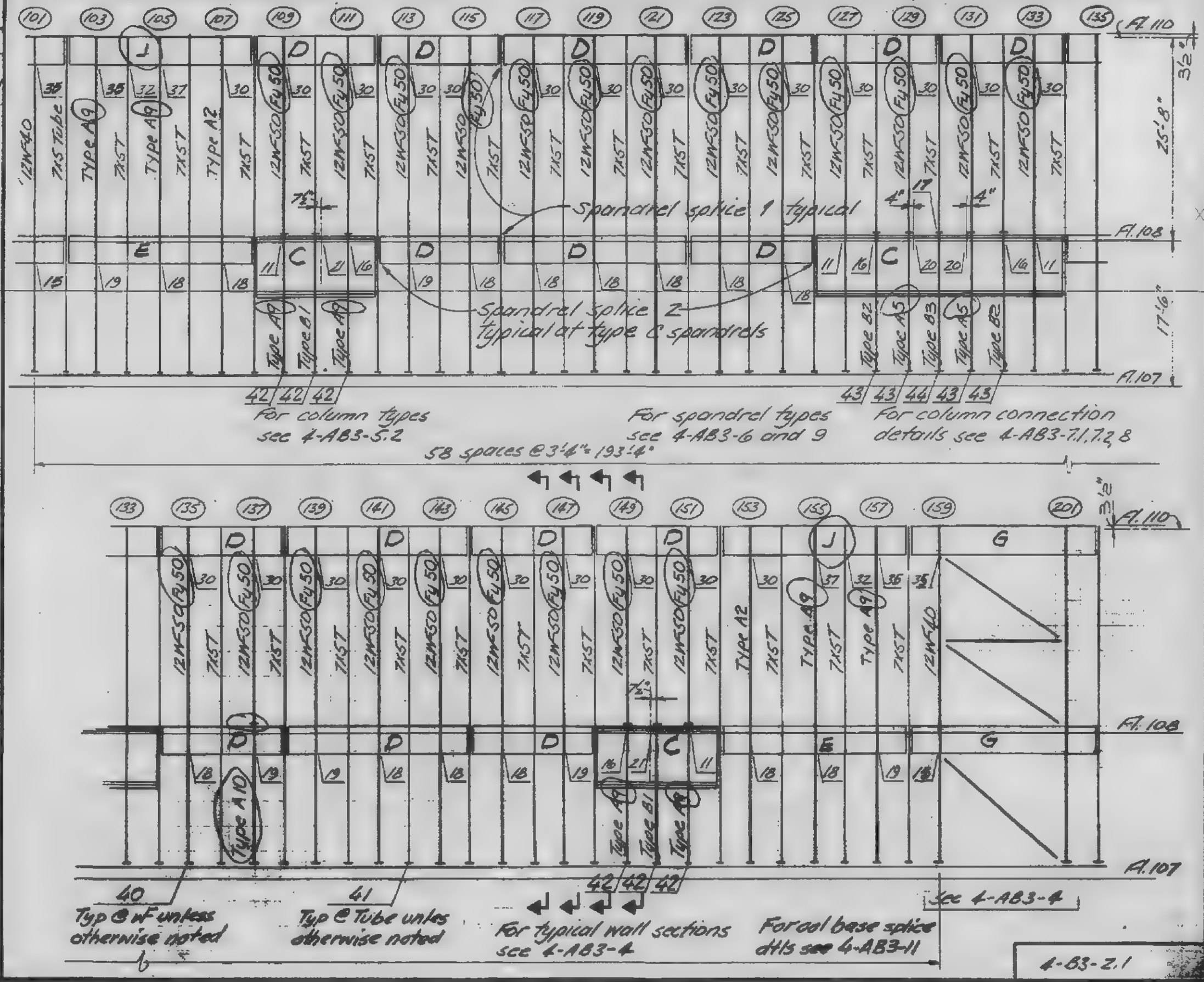

DESIGNED: C. H.
DRAWN: J. A.
REVIEWED: M. A. B.

4-B3-2.1

SKILLING, HELLE, CHRISTIANSEN, ROBERTSON — Structural & Civil Engineers

PROJECT: THE WORLD TRADE CENTER | TITLE: EXT WALL - 107 TO 110 - COL & SPANDREL SCH - TOWER B | DATE: 9-2-69

REVISIONS
10-23-69
12-15-69
Conn d+b added
2-26-70
3-16-70
8-3-70

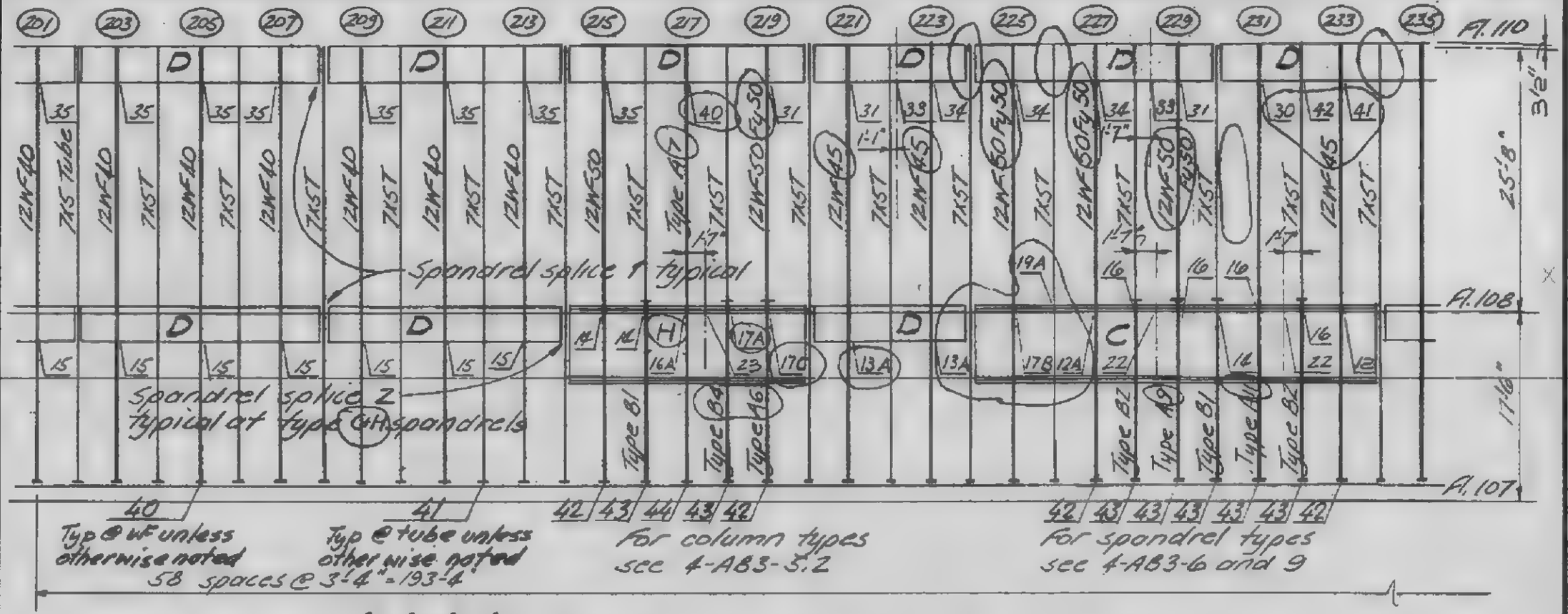

DESIGNED W.H.
DRAWN J.A.
REVIEWED W.H.C.
R 12/20

4-03-2.2

SKILLING, HELLE, CHRISTIANSEN, ROBERTSON — Structural & Civil Engineers

PROJECT: THE WORLD TRADE CENTER

TITLE: EXT WALL - 107 TO 110 - COL & SPANDREL SCH - TOWER B

DATE: 9-2-69

REVISIONS

10-23-69

12-15-69
Conn dtls added

2-26-70

5-16-70

8-3-70

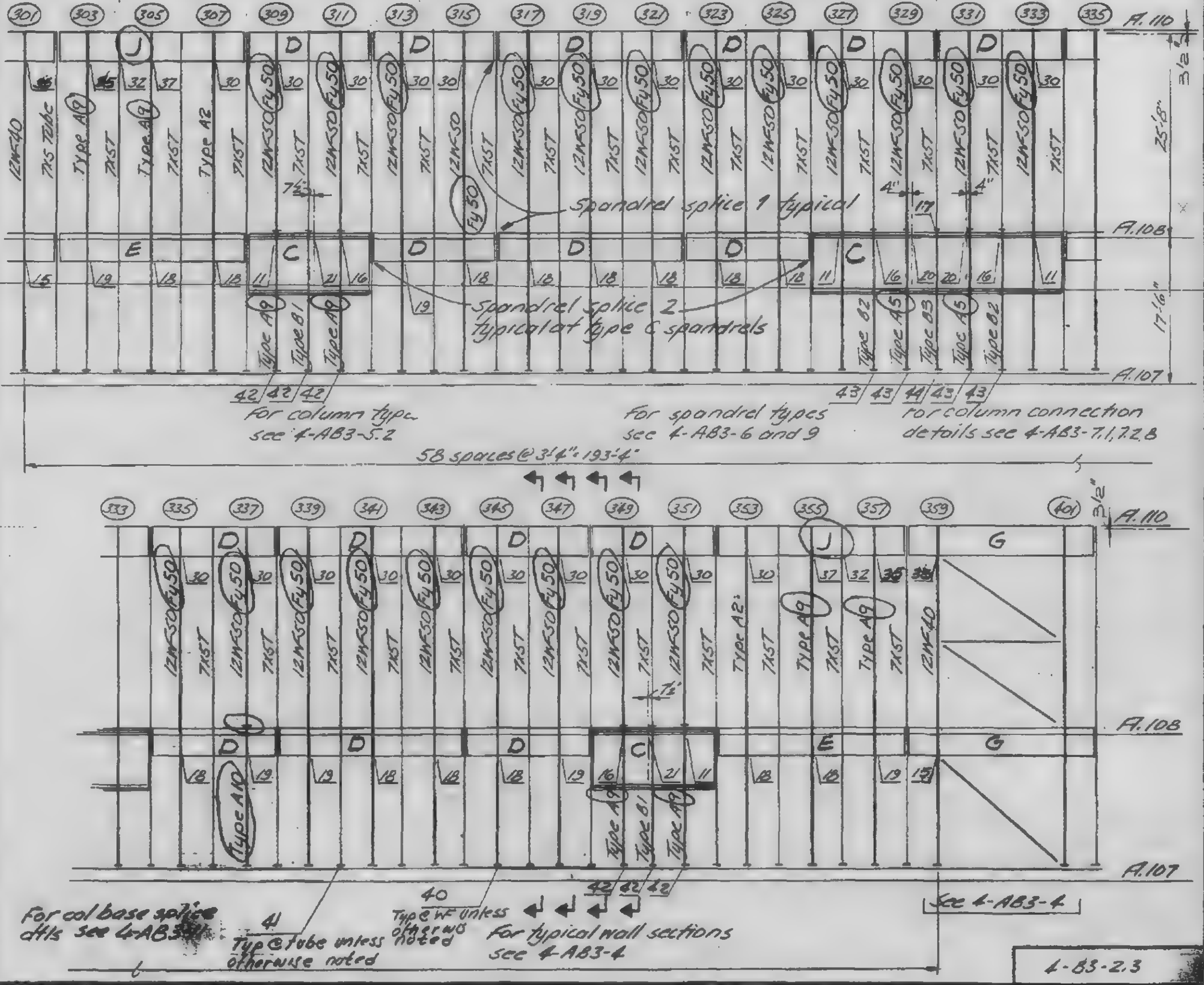

DESIGNED J.H.

DRAWN J.A

REVIEWED WHB.

4-B3-2.3

SKILLING, HELLE, CHRISTIANSEN, ROBERTSON — Structural & Civil Engineers

PROJECT: THE WORLD TRADE CENTER

TITLE: EXT WALL - 101 TO 110 - COL & SPANDREL SCH - TOWER 8

DATE: 9-2-69

REVISIONS
10-23-69
12-15-69
Conn dtls added
2-26-70
3-16-70
8-3-70

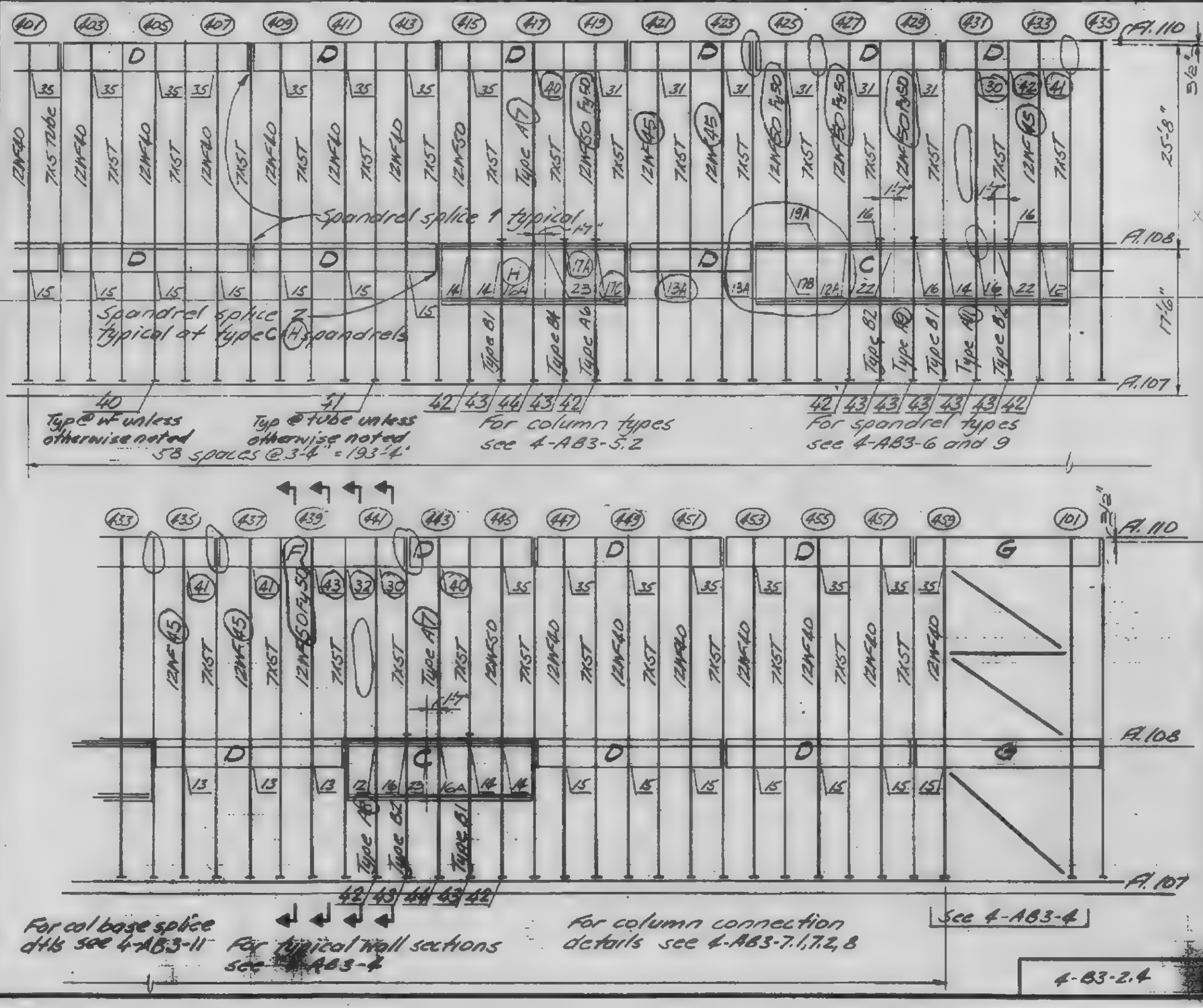

DESIGNED J.H.
DRAWN J.A.
REVIEWED M.I.B.

12/13

4-83-2.4

SKILLING, HELLE, CHRISTIANSEN, ROBERTSON — Structural & Civil Engineers

PROJECT: THE WORLD TRADE CENTER | TITLE: EXTERIOR WALL -101 TO 110- SPANDREL SPLICES | DATE: 2-15-69

REVISIONS
2-15-69
2-26-70
3-16-70

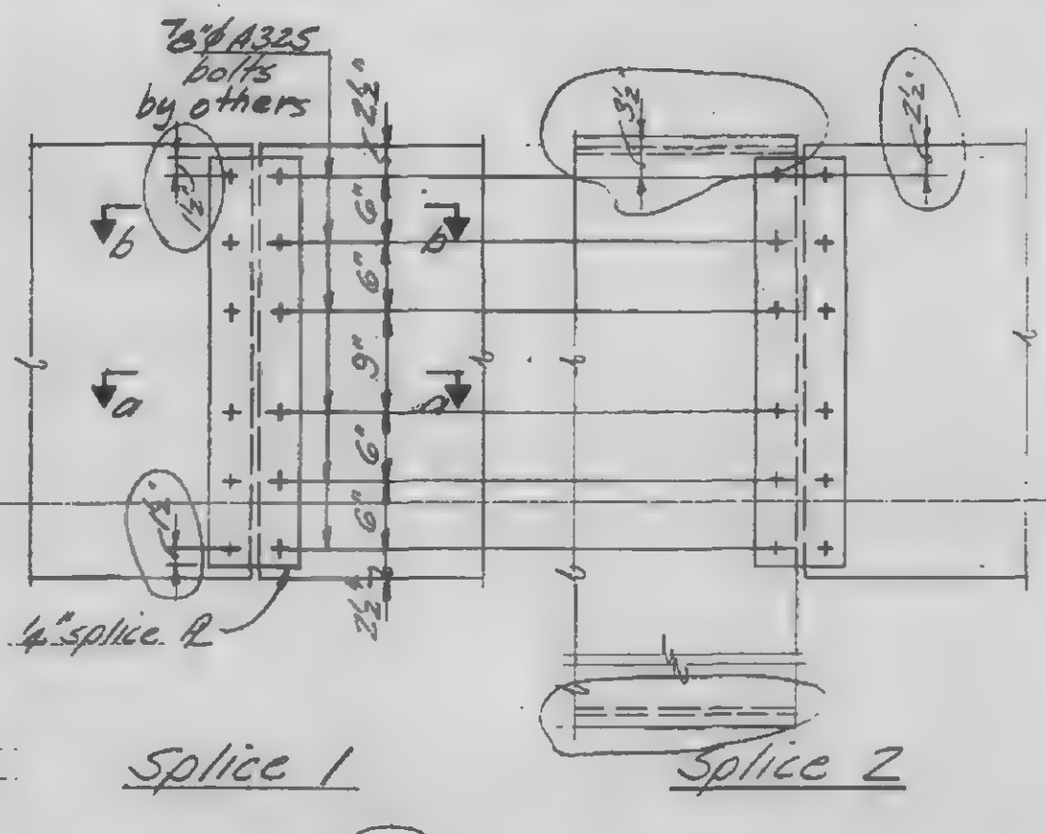

Splice 1

Splice 2

Notes:
1. Holes in spandrel plates to be 1 1/16" ϕ
2. Holes in splice plates 1/16" larger than bolt diameter.
3. Bolt heads on outside face.
4. Splice plates to be shipped attached to spandrel plates with 2 shipping bolts and shall not project beyond end of spandrel during shipping.

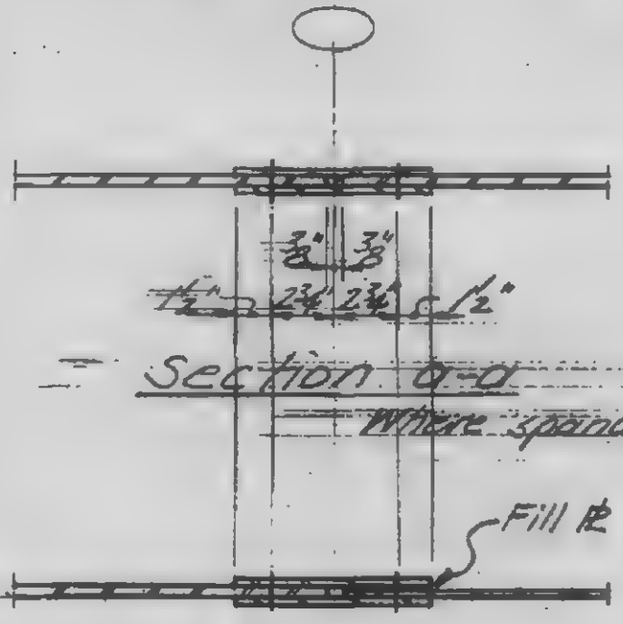

Section a-a
Where spandrels some thickness.

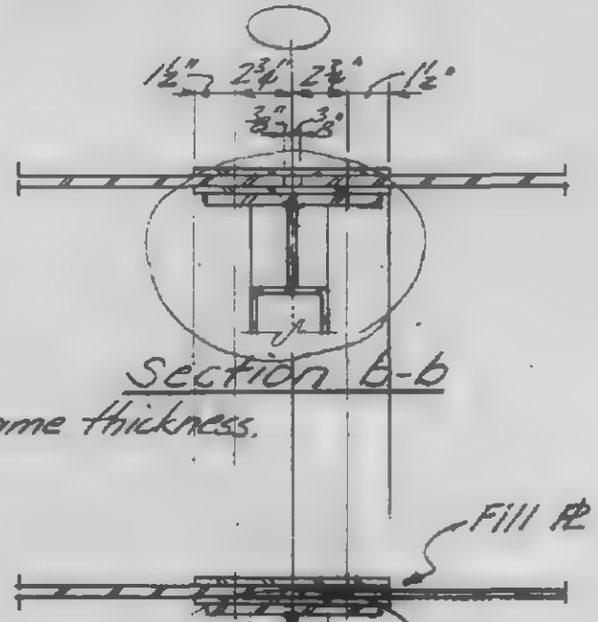

Section b-b

Section a-a
Where spandrel thickness varies.

Section b-b

DESIGNED
DRAWN
REVIEWED

4-AB3-3

WORTHINGTON, SKILLING, HELLE & JACKSON — Civil & Structural Engineers

PROJECT THE WORLD TRADE CENTER | TITLE EXTERIOR WALL - 107 TO 110 - TYPICAL ELEVATION | DATE 6-5-67

REVISIONS
8/15/69
12-15-69
2-26-70
3-16-70

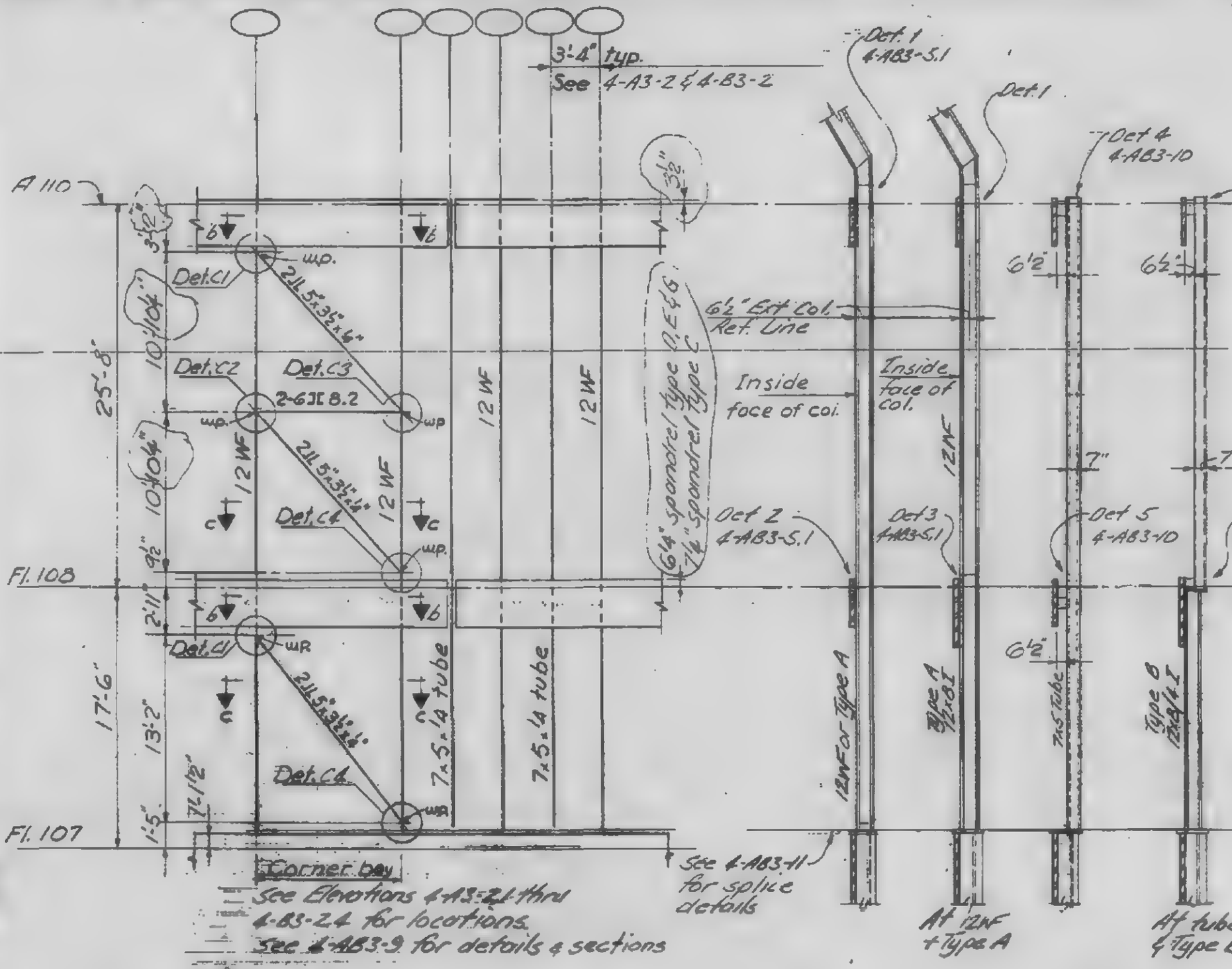

Part elevation of ext. wall

Sections through ext. wall

LESLIE E. ROBERTSON — LICENSED PROFESSIONAL ENGINEER — No. 34360 — STATE OF NEW YORK

4-AB3-4

SKILLING, HELLE, CHRISTIANSEN, ROBERTSON — Structural & Civil Engineers

PROJECT: THE WORLD TRADE CENTER | TITLE: EXTERIOR WALL - 107 TO 110 - COLUMN DETAILS | DATE: 4-12-67

REVISIONS
8-15-69
12-15-69
2-26-70
3-16-70
8-3-70

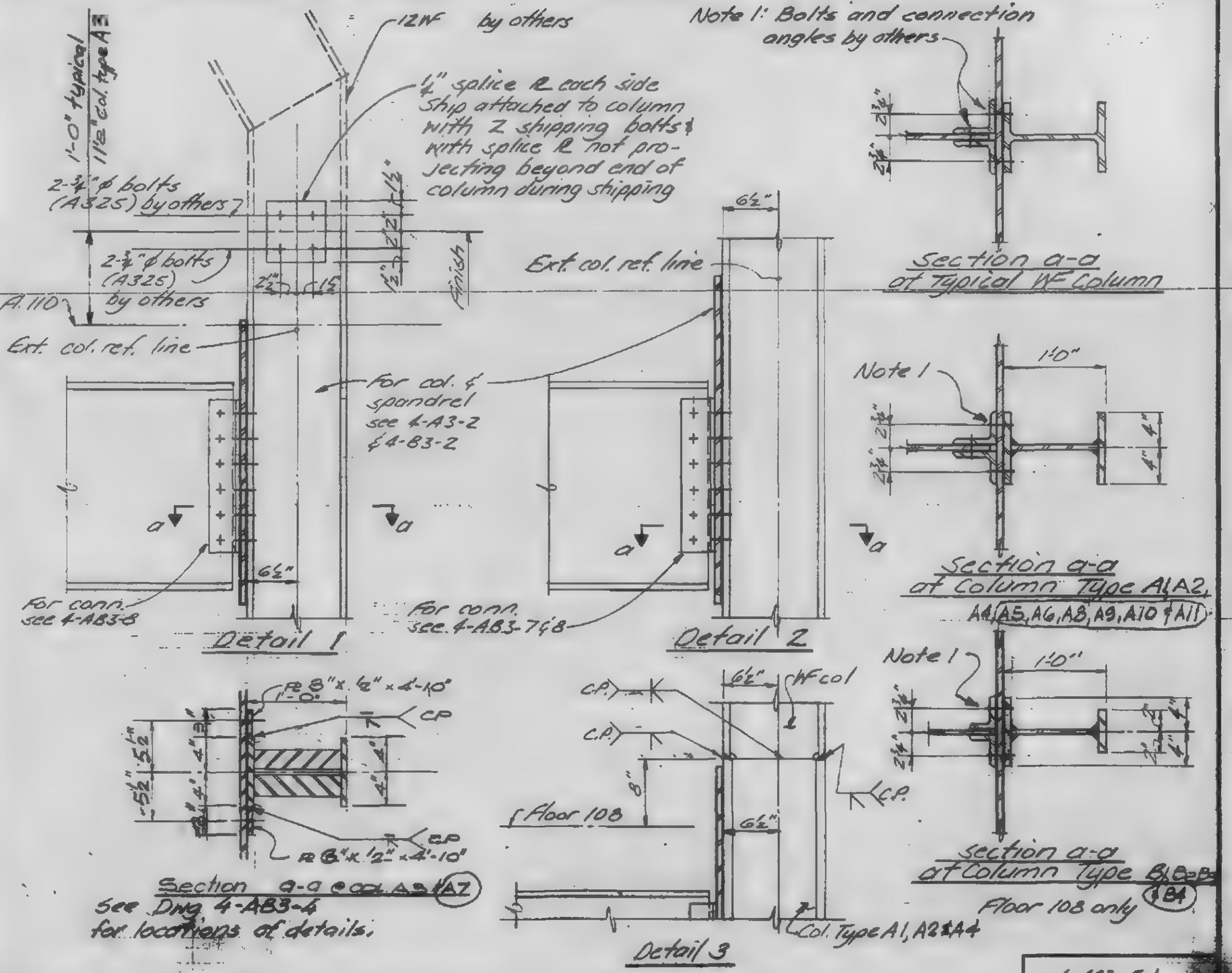

DESIGNED J.H.
DRAWN J.A.
REVIEWED W.H.B.

4-AB3-5.1

SKILLING, HELLE, CHRISTIANSEN, ROBERTSON — Structural & Civil Engineers

PROJECT: THE WORLD TRADE CENTER | TITLE: EXTERIOR WALL-107TO110- COLUMN TYPES | DATE: 8/15/69

REVISIONS
- 12-15-69
- 3-16-70
- 4-10-70
- 8-3-70R

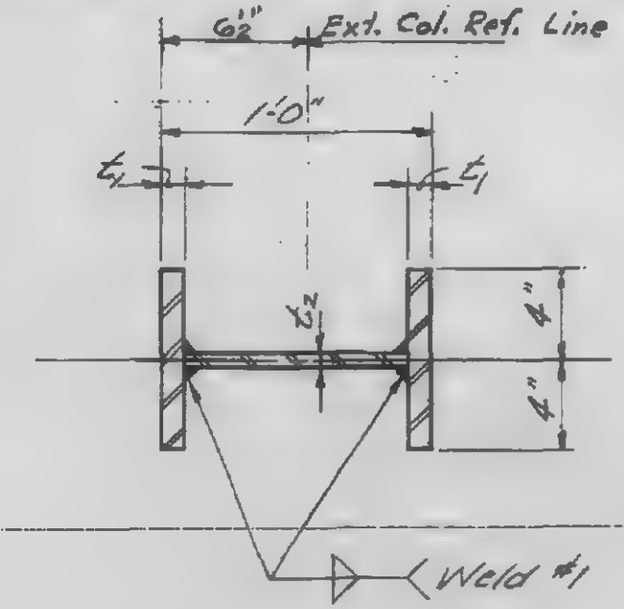

A1, A2 & A4 thru A11

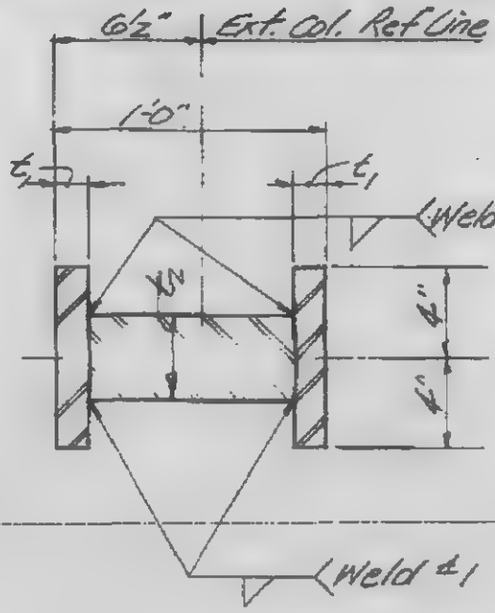

A3 & A7

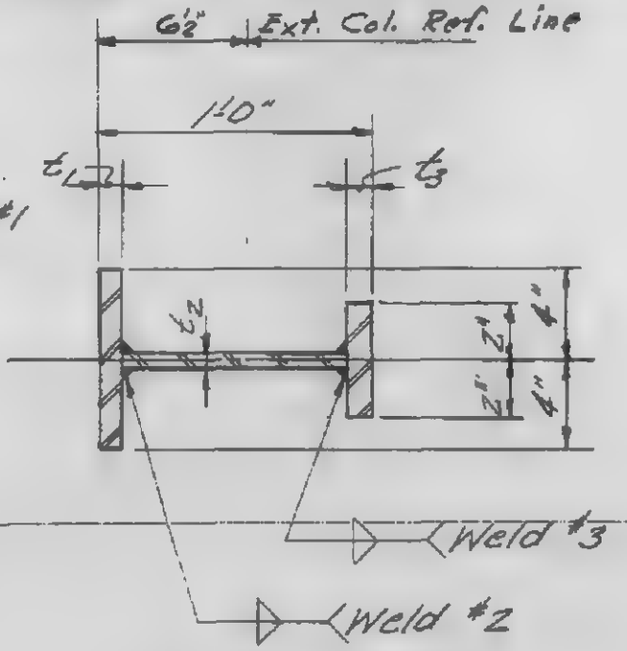

B1 thru B4

Schedule Col. Type A					
Tower	Mark	t_1	t_2	Weld #1	Fy
A&B	A1	1	½	5/16	42
A&B	A2	1½	¾	⅜	42
A	A3	1½	3½	½	50
A	A4	1	¾	5/16	42
B	A5	1¼	¾	5/16	42
B	A6	1¾	¾	⅜	42
B	A7	1¾	3½	½	50
B	A8	2	¾	⅜	42
B	A9	1¼	½	5/16	42
B	A10	1¼	⅜	5/16	42
B	A11	1½	½	⅜	42

Column Type A

Schedule Column Type B							
Tower	Mark	t_1	t_2	t_3	Fy	Weld #2	Weld #3
A&B	B1	1	½	1	42	5/16	5/16
A&B	B2	1½	¾	1½	42	⅜	⅜
A&B	B3	1½	¾	1½	50	⅜	⅜
B	B4	1¾	¾	1¾	50	⅜	⅜

Column Type B

See Dwgs 4-A3-2.1 thru 4-A3-2.4 and 4-B3-2.1 thru 4-B3-2.4 for locations.
See Dwg 4-AB3-1 for Index & Gen Notes.

DESIGNED: H
DRAWN: J.A.
REVIEWED: W.H.B.

4-AB3-S.2

SKILLING, HELLE, CHRISTIANSEN, ROBERTSON — Structural & Civil Engineers

PROJECT: THE WORLD TRADE CENTER | TITLE: EXTERIOR WALL -107 TO 110- SPANDREL TYPES | DATE: 4-12-69

REVISIONS
- 8/15/69
- 12/15/69
- 3/16/70
- 4/10/70
- 8/3/70

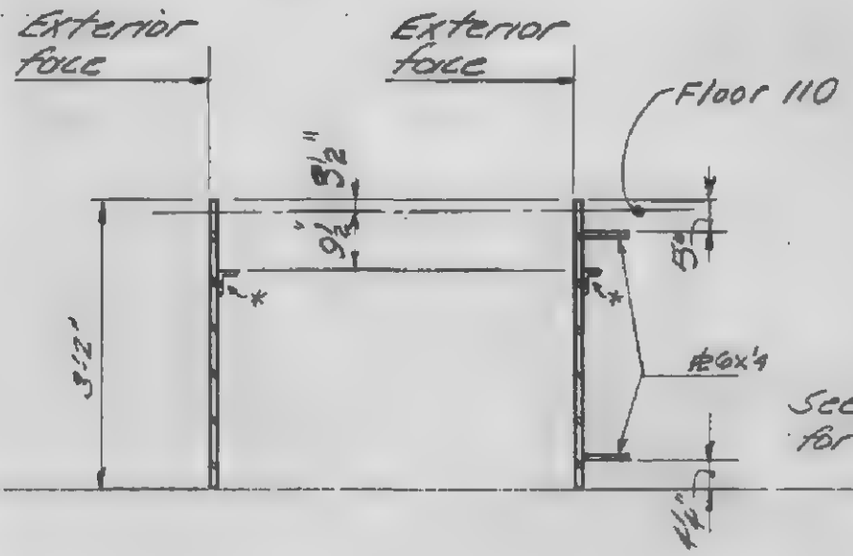

SPANDREL SCHEDULE

Type	Depth	Thick	Fy	Remarks
C	4'-10"	3/4	36	
D	3'-2"	3/8	36	
E	3'-2"	1/2	36	
F	3'-2"	7/8	36	
G	3'-2"	3/8	36	Corner spandrel see 4-AB3-9
H	4'-10"	7/8	36	
J	3'-2"	1	36	

Types D, F & J

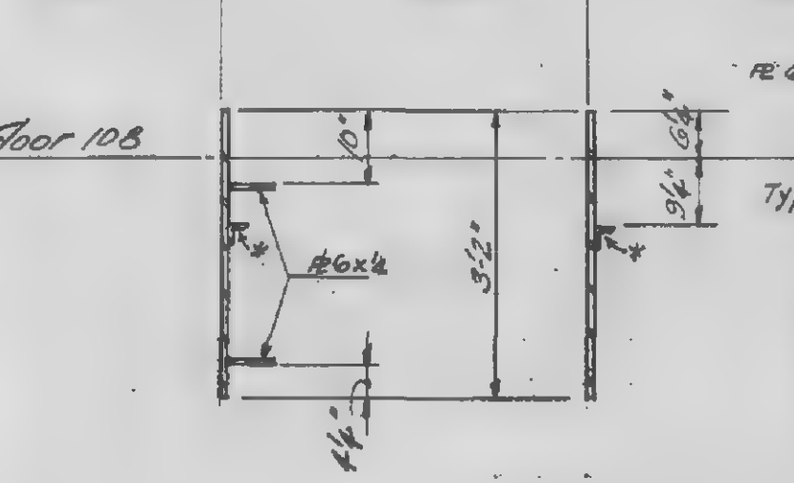

Type G

Types D & E

Type G

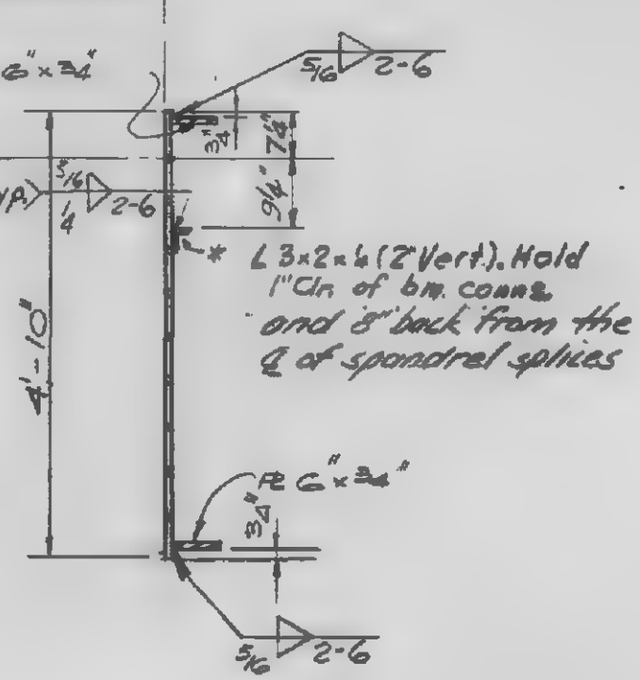

Type C & H

DESIGNED
DRAWN
REVIEWED

4-AB3-6

SKILLING, HELLE, CHRISTIANSEN, ROBERTSON — Structural & Civil Engineers

PROJECT THE WORLD TRADE CENTER | TITLE EXTERIOR WALL CONNECTIONS - FLOOR 108 | DATE 4-12-67

REVISIONS

12-15-69
2-26-70
3-16-70
4-27-70
8-3-70

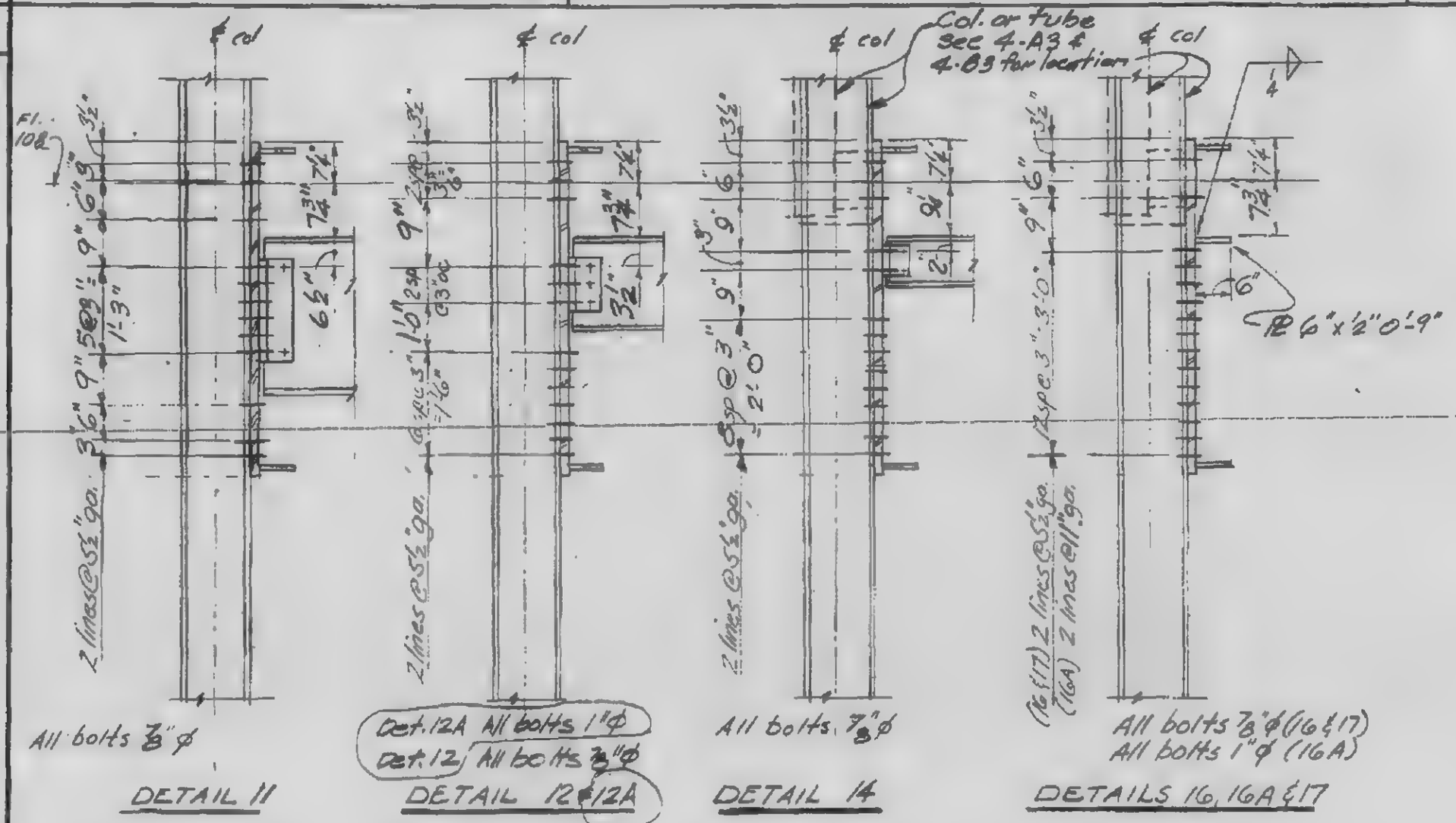

All bolts ⅞"ϕ

DETAIL 11

Det. 12A All bolts 1"ϕ
Det. 12 All bolts ⅞"ϕ

DETAIL 12 & 12A

All bolts ⅞"ϕ

DETAIL 14

All bolts ⅞"ϕ (16 & 17)
All bolts 1"ϕ (16A)

DETAILS 16, 16A & 17

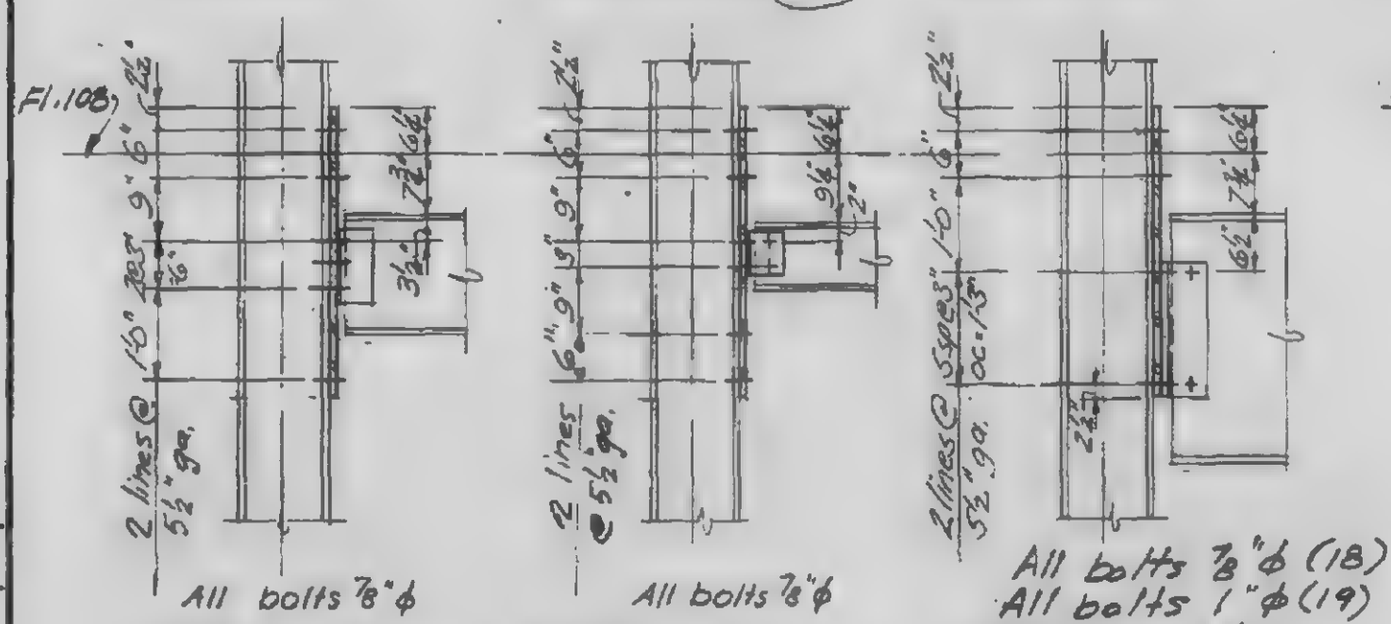

All bolts ⅞"ϕ

DETAIL 13

All bolts ⅞"ϕ

DETAIL 15

All bolts ⅞"ϕ (18)
All bolts 1"ϕ (19)

DETAILS 18 & 19

Notes:

1. Bolts, connection angles and beams by others.
2. All holes in spandrels to be 1 1/16" ϕ. All holes in column, connection angles and beams to be 1/16" larger than bolt diameter.
3. All bolts A325 or A490. See Drawing Book 9.

DESIGNED B
DRAWN LHB
REVIEWED

4-AB3-7.1

SKILLING, HELLE, CHRISTIANSEN, ROBERTSON — Structural & Civil Engineers

PROJECT: THE WORLD TRADE CENTER

TITLE: EXTERIOR WALL CONNECTIONS - FLOOR 108

DATE:

REVISIONS
2-26-70
3-16-70
4-27-70

-All bolts 1" ϕ unless otherwise noted.
-See Notes on 4-AB3-7.1

Sect. a-a

Sect. c-c

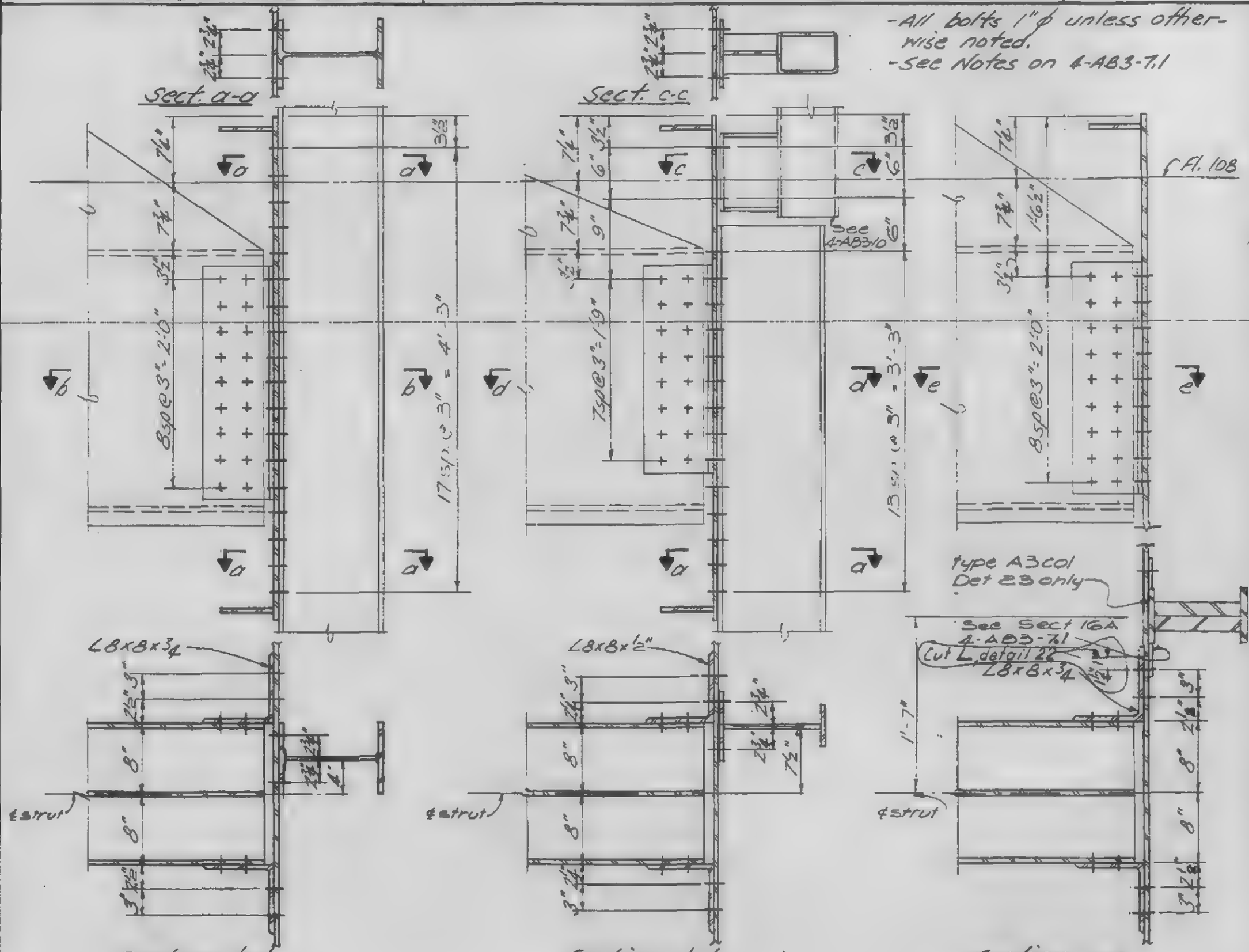

Section b-b
Detail 20

Section d-d
Detail 21

Section e-e
Detail 22 & 23

LICENSED PROFESSIONAL ENGINEER — LESLIE E. ROBERTSON — No. 34360 — UNIVERSITY OF THE STATE OF NEW YORK

DESIGNED

DRAWN

REVIEWED

4-AB3-7.2

SKILLING, HELLE, CHRISTIANSEN, ROBERTSON — Structural & Civil Engineers

PROJECT THE WORLD TRADE CENTER | TITLE EXTERIOR WALL CONNECTIONS - FLOOR 108 | DATE 8-3-70

REVISIONS

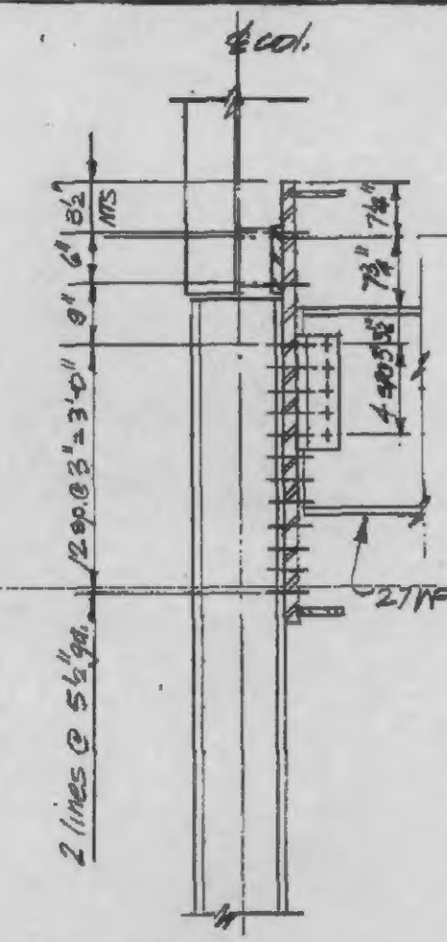

All bolts 1" ϕ

DETAIL 17A

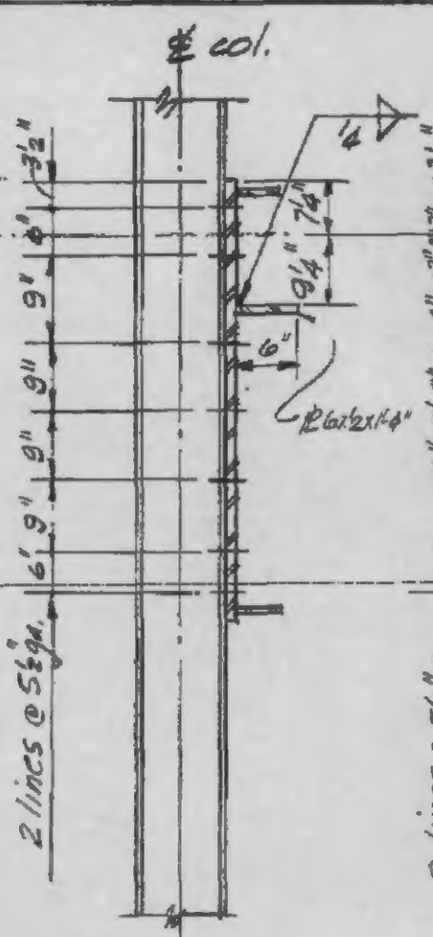

All bolts ⅞" ϕ

DETAIL 17B

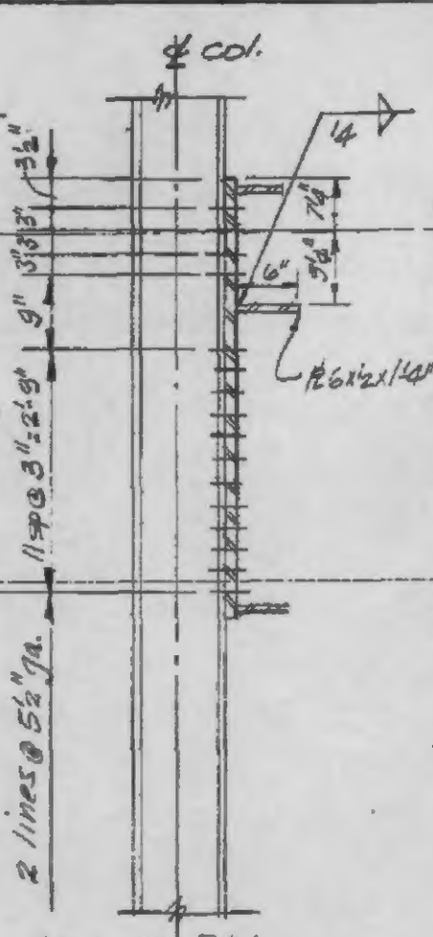

All bolts ⅞" ϕ

DETAIL 17C

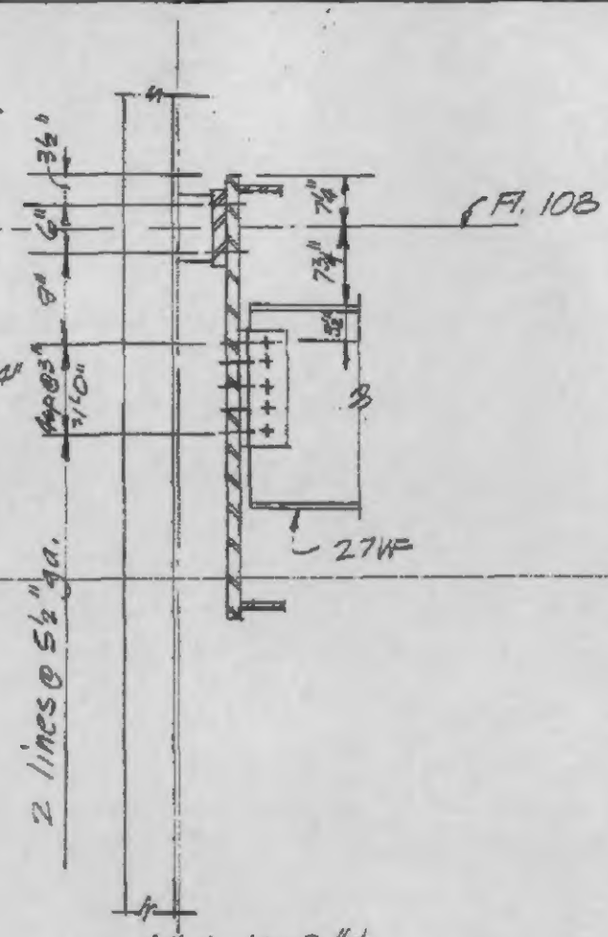

All bolts ⅞" ϕ

DETAIL 19A

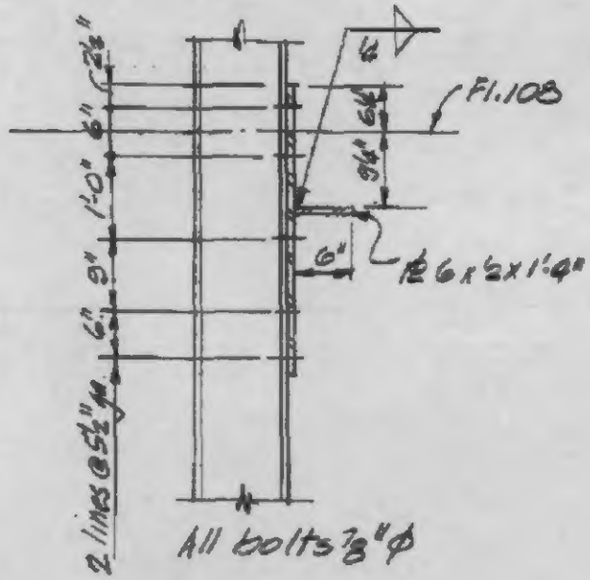

All bolts ⅞" ϕ

DETAIL 13A

Notes:

1. Bolts, connection angles and beams by others.
2. All holes in spandrels to be 1 1/16" ϕ. All holes in column, connection angles and beams to be 1/16" larger than bolt diameter.
3. All bolts A325 or A490. See Drawing Book 9.

LICENSED PROFESSIONAL ENGINEER — LESLIE E. ROBERTSON — No. 34360 — UNIVERSITY OF THE STATE OF NEW YORK

DESIGNED

DRAWN FM Ozeke

REVIEWED

4-A83-7.3

SKILLING, HELLE, CHRISTIANSEN, ROBERTSON — Structural & Civil Engineers

PROJECT THE WORLD TRADE CENTER | TITLE EXTERIOR WALL CONNECTIONS - FLOOR 110 | DATE 4-12-67

REVISIONS
12/15/69
2-26-70
3-16-70
8-3-70

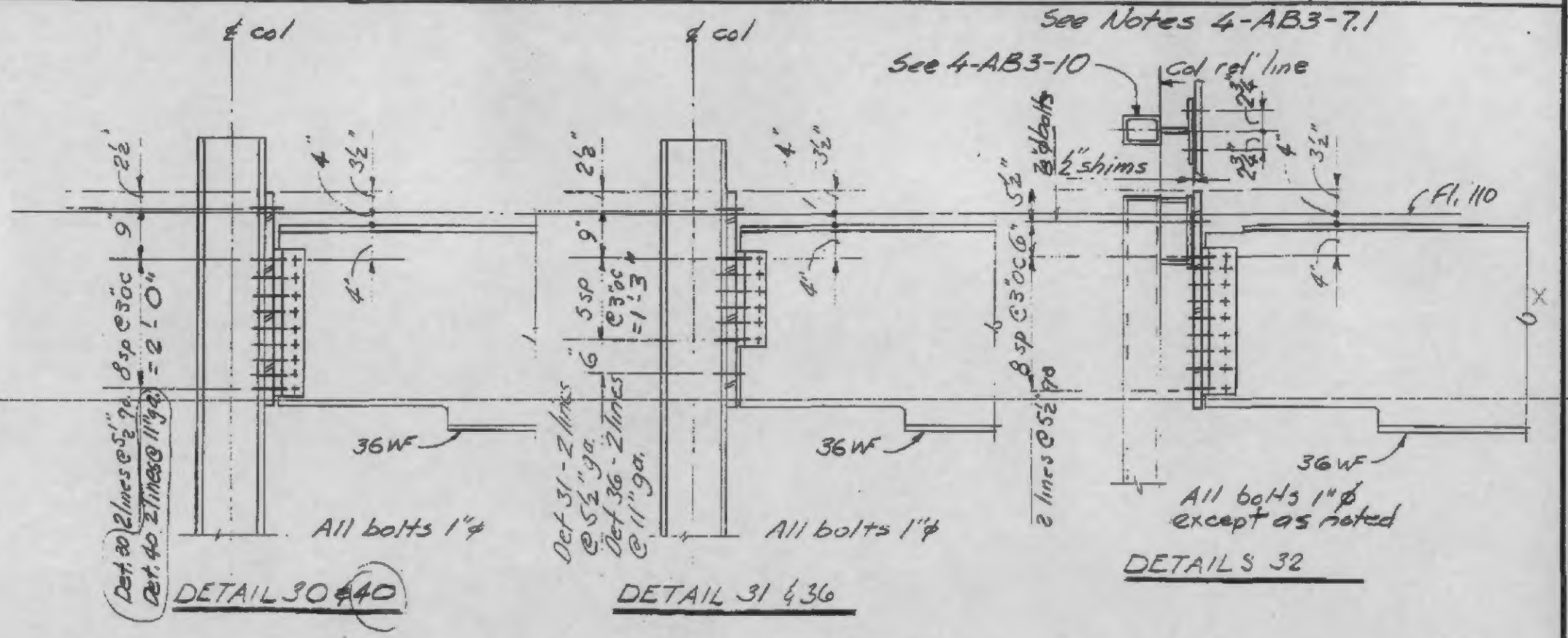

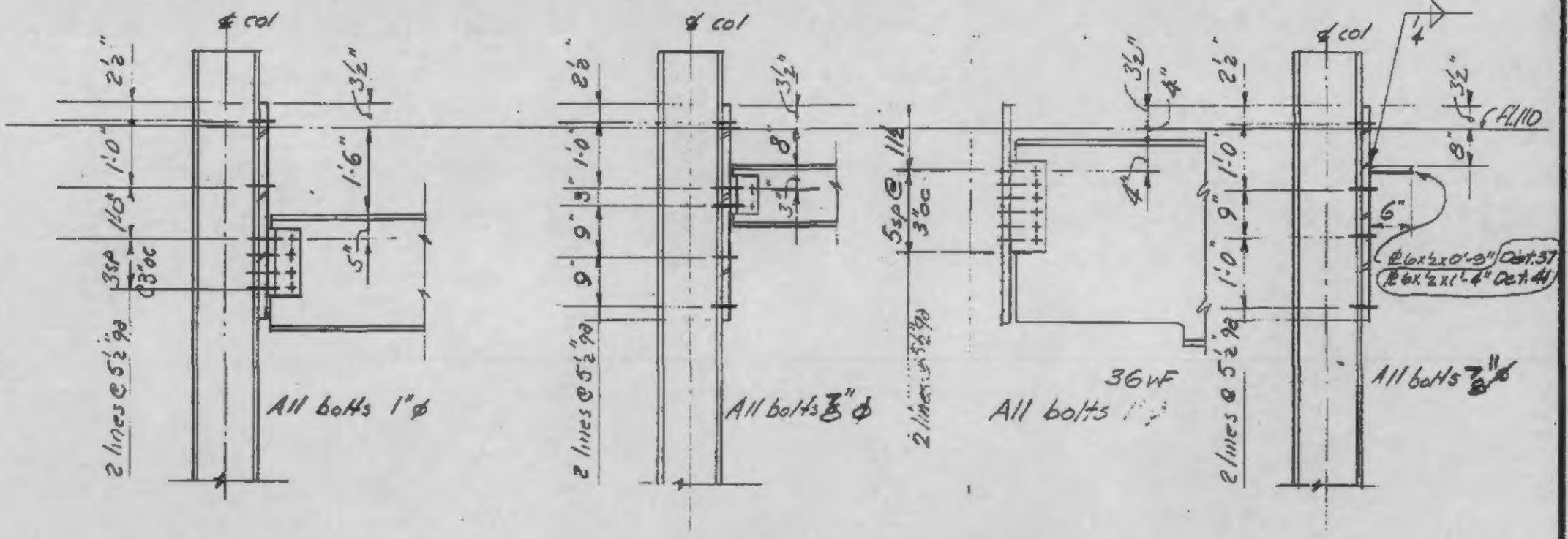

DESIGNED
DRAWN
REVIEWED

4-AB3-8.1

PROJECT THE WORLD TRADE CENTER | TITLE EXTERIOR WALL CONNECTIONS - FLOOR 110 | DATE 8-3-70

REVISIONS

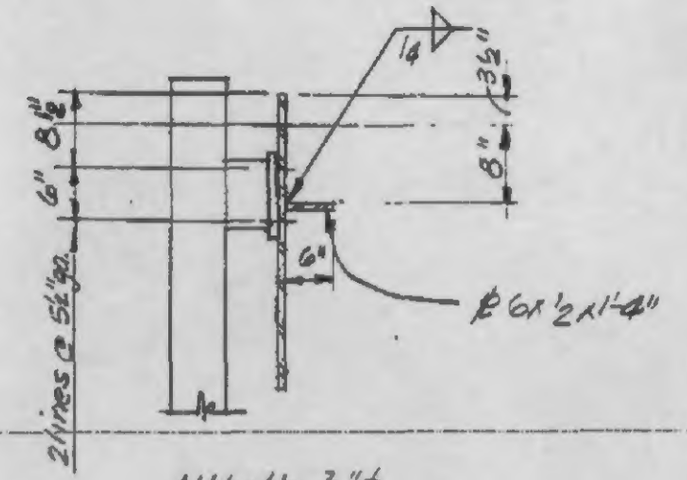

All bolts ⅞"ϕ

DETAIL 42

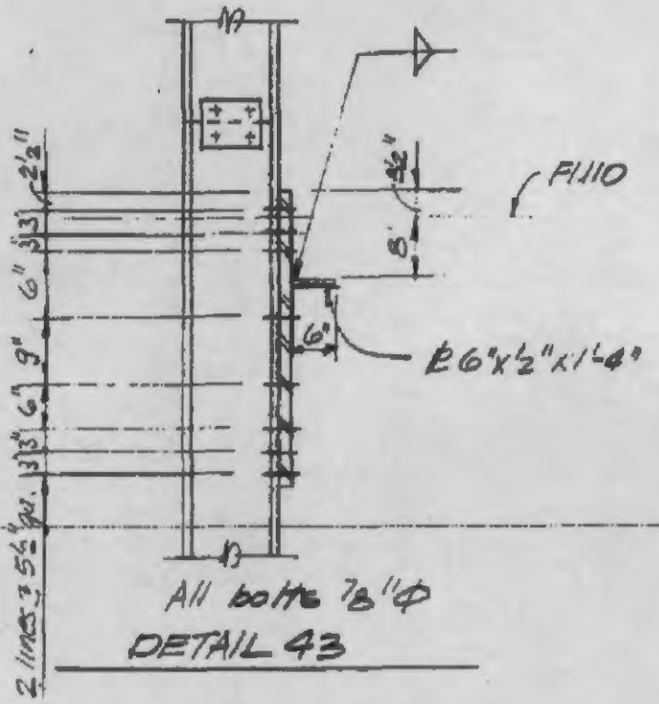

All bolts ⅞"ϕ

DETAIL 43

LICENSED PROFESSIONAL ENGINEER
LESLIE E. ROBERTSON
No. 34360
UNIVERSITY OF THE STATE OF NEW YORK

SIGNED

DRAWN

REVIEWED

9-AB3-8.2

WORTHINGTON, SKILLING, HELLE & JACKSON — Civil & Structural Engineers

PROJECT: THE WORLD TRADE CENTER | TITLE: EXTERIOR WALL - 107 to 110 - CORNER DETAILS | DATE: 4-12-67

REVISIONS
8-15-69
12-15-69
2-26-70
4-10-70

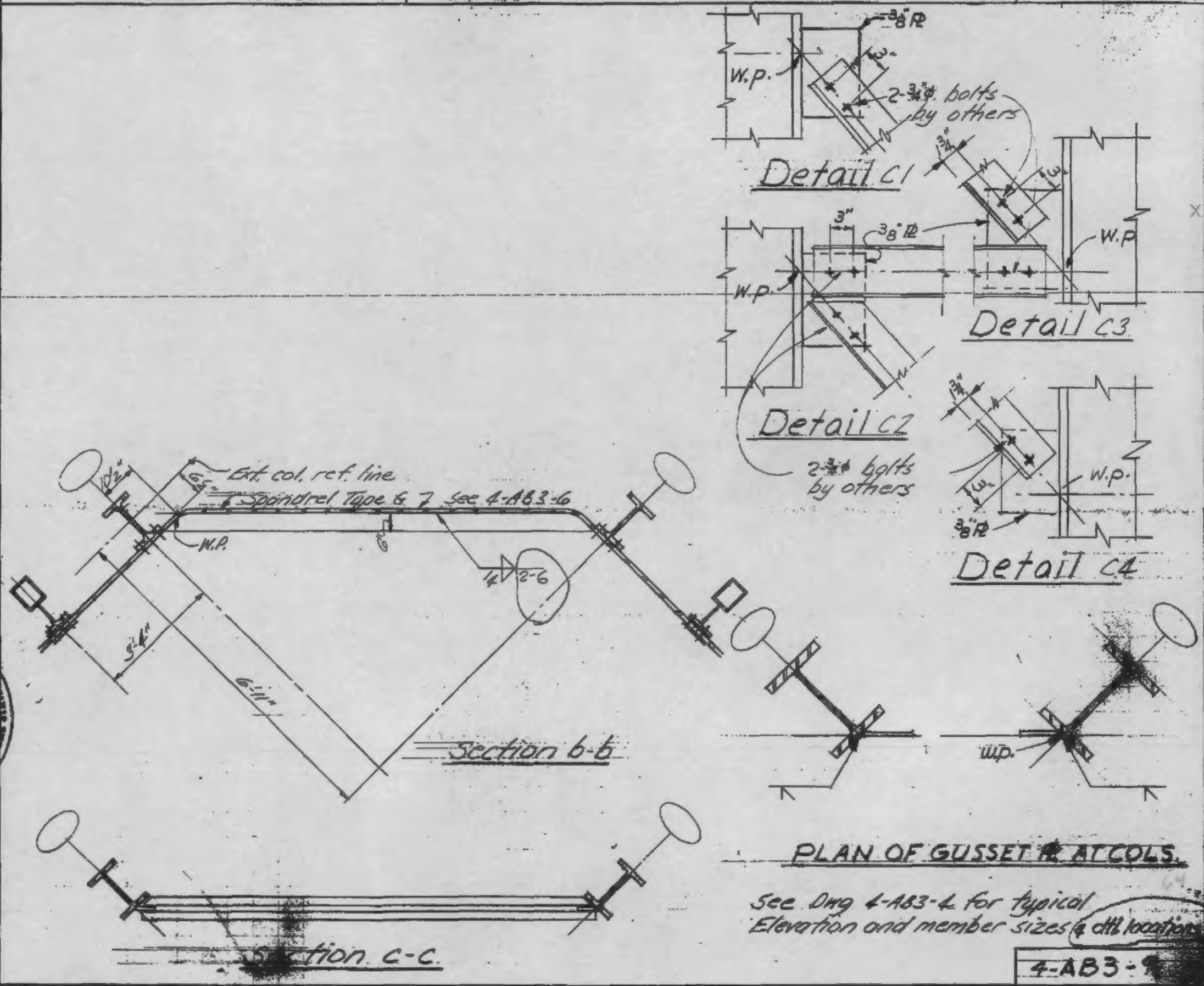

PLAN OF GUSSET PL AT COLS.

See Dwg 4-AB3-4 for typical Elevation and member sizes & dtl locations

4-AB3-9

DESIGNED J.A.

DRAWN J.A.

REVIEWED W.A.B.